JELENKO ADMIRAL VPF

OPERATING AND MAINTENANCE INSTRUCTIONS

TABLE OF CONTENTS

SPECIFICATIONS 3
INSTALLATION 4
MUFFLE CURING 5
FRONT PANEL CONTROLS 7-11
SIDE CONTROLS 13-14
REAR PANEL 16
DESCRIPTION OF FIRING CYCLE PARAMETERS 17-18
ERROR MESSAGES 19-20
PROGRAMMING PROGRAMS "1" THROUGH "999" 21-23
UPPER AND LOWER LIMITS FOR NINE FIRING CYCLE PARAMETERS 24
"IN-CYCLE" PARAMETER CHANGES 24
THE "AUTO IDLE" FEATURE 25
PROGRAMMING THE IDLE PROGRAM 26
OPERATING THE IDLE PROGRAM 27
OPERATING THE NIGHT PROGRAM 27
CALIBRATION 28-29
TRANSFERRING PROGRAMS 30
THE SELF-DIAGNOSTIC SYSTEM 31-33
REPLACEMENT OF THE THERMOCOUPLE 37
REPLACEMENT OF THE MUFFLE 37-38
REPLACEMENT OF THE POWER SUPPLY CIRCUIT BOARD 38
REPLACEMENT OF THE CONTROL CIRCUIT BOARD 39-40
REPLACEMENT OF THE SOLID STATE RELAY 40
REPLACEMENT OF THE RELAY CIRCUIT BOARD 41
REPLACEMENT OF THE ALPHA-NUMERIC DISPLAY BOARD 41-42
REPLACEMENT OF THE FRONT CIRCUIT BOARD 42
RENEWAL PARTS LIST 43
FAHRENHEIT/CELSIUS CONVERSION CHART 44
FOR SERVICE 45

JELENKO ADMIRAL
VACUUM PORCELAIN FURNACE

SPECIFICATIONS

Maximum Temperature: 2200°F (1200°C)

Overall Dimensions: 16 ½″ Wide x 15 ¼″ Deep x 21 ¼″ High
(41.9 cm Wide x 38.7 cm Deep x 54.0 cm High)

Muffle: Accepts any restoration 3″ Diameter x 2 ¼″ High
(7.6 cm Diameter x 5.7 cm High)

Electrical: 100V 50/60 Hz - 1400 Watts (PN 311302)
115V 50/60 Hz - 1400 Watts (PN 311300)
230V 50/60 Hz - 1400 Watts (PN 311301)

Net Weight (Unpackaged): 51.4 lbs (23.1 Kg)

Finish: Black and orange textured enamel over steel

Supplied Accessories: Set of three - Single-Point Sagger Trays
Set of two - Crown Sagger Trays
Full Arch Sagger Tray
Calibration Kit (Includes Instrument and pure Silver Wire)

WARNING

The ceramic fiber refractory material used in this product is known to produce cristobalite (crystalline silica) after being in service at temperatures greater than 1600°F (871°C).

In certain cases, such as when servicing the equipment, insulation dust may be produced and may be irritating to the skin, eyes and respiratory tract and may be harmful if inhaled. Prolonged exposure or repeated exposure to ceramic fiber dusts which have been exposed to temperatures indicated above may cause lung disease (silicosis).

Where insulation dust may be produced, the following work practices are recommended:

- Use local exhaust equipment to keep airborne fiber exposure at the lowest attainable level.
- Use a NIOSH or MSHA approved high-efficiency air-purifying respirator (3M 8710 or equivalent) during installation and removal of insulation that has been exposed to high temperatures and whenever airborne concentrations exceed 2 fibers/cc or 2 mg/m of dust. For airborne concentrations greater than 5 fibers/cc consult the MSDS on ceramic fibers.
- While handling the above insulation, wear long-sleeve clothing, gloves, hat and eye protection to prevent skin and eye contact. Wash thoroughly after handling.
- Avoid taking unwashed clothes home. Wash work clothes separately from other clothing. Rinse washing machine thoroughly after use.

INSTALLATION

1. Remove all packaging material from around the furnace.

2. Position the furnace in an area which provides a minimum of two inches (5.1 cm) of free air space on all sides.

3. Connect the vacuum pump hose from your vacuum pump to the Vacuum Hose Connector located at the rear of the furnace. The use of a Jelenko Oil-Less Vacuum Pump (115V - PN 306230; 230V - PN 306235) is recommended.

4. Plug the vacuum pump line cord into the Vacuum Pump Receptacle located at the rear of the furnace.

5. Plug the line cord into a wall receptacle rated for a minimum of 15 amperes. An independent electrical circuit must always be used (SEE NOTE BELOW).

6. Unpackage the Program Memory Card and insert the card, *label side upward* and *connector side inward,* into the Program Memory Card Slot located on the left side of the furnace. Make certain that the card is inserted completely and that the connector is engaged with the circuit board.

7. Press the POWER SWITCH to the "on" position. The Indicator Lamp above the switch will illuminate, the DIGITAL DISPLAY will indicate the actual Muffle temperature and the ALPHA-NUMERIC DISPLAY will read "SELECT PROGRAM (1-999) ___."

8. Depress the DOOR DOWN Key and allow the furnace Door to open completely.

9. Unpackage the Door Brick Platform and position the platform on the furnace Door within the raised ridge.

10. Calibrate the furnace as outlined under "CALIBRATION" on pages 28-29 of this manual.

11. Your Jelenko Admiral VPF is now ready for programming and operation.

IMPORTANT NOTE: It is important that your Admiral furnace be operated only from an independent electrical outlet, with no other equipment on the same circuit.

This furnace, as with all microprocessor-controlled devices, will perform reliably when it is operated from a stable power source, free from voltage fluctuations.

MUFFLE CURING

Muffle in the Admiral vacuum porcelain furnace has been designed and constructed using the most modern, lightweight ceramic fiber insulating materials. As a result of this type of design, the Muffle is highly resistant to the absorption of atmospheric moisture and in most cases does not require an extensive Muffle Curing procedure.

However, if vacuum loss is observed while operating the furnace after initial installation, or after replacing the Muffle, it is most likely the result of Muffle Outgassing* and the Muffle Curing procedure outlined below should be performed *two times:*

Using any available Program "1" through "999," program the following firing cycle parameters:

PREHEAT TIME	- 0 MINUTES 10 SECONDS
LOW TEMP	- 1000°F (538°C)
EVACUATION TEMP	- 1000°F (538°C)
HEAT RATE	- 100°F (56°C)/MINUTE
VACUUM LEVEL	- 28 INCHES (71 CENTIMETERS) OF MERCURY
VENT	- 20 MINUTES 0 SECONDS
HIGH TEMP	- 1800°F (982°C)
HOLD TIME	- 20 MINUTES 0 SECONDS
COOL TIME	- 0 MINUTES 10 SECONDS

*Muffle Outgassing occurs when moisture contained within the Muffle insulation, or Door Brick Platform, is boiled and changed into a gaseous state, usually at Muffle temperatures of 1000°F (538°C) and above.

This gas results in a reduction in the vacuum level within the furnace Vacuum Chamber, thus creating APPARENT vacuum leakage.

FRONT PANEL CONTROLS

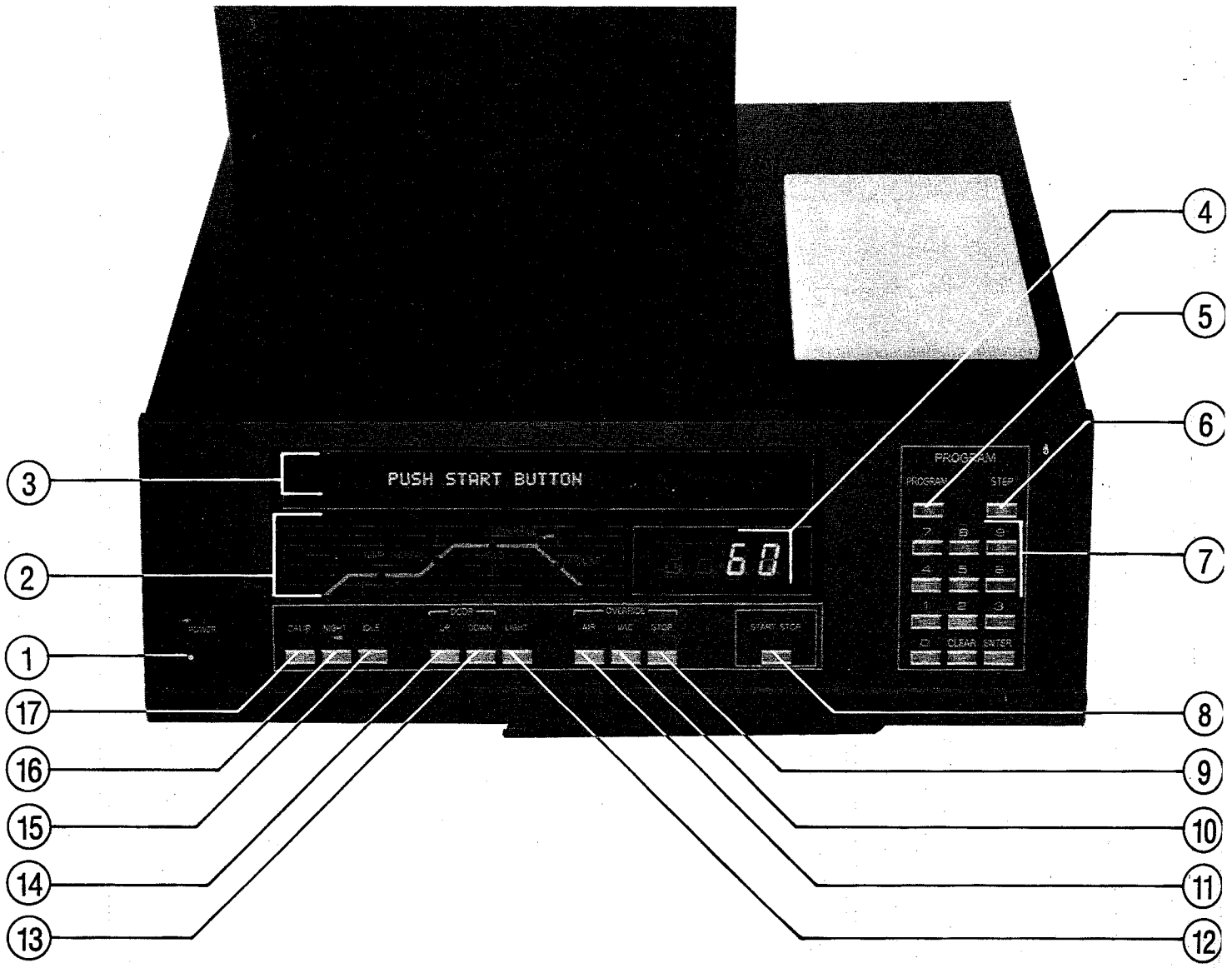

1. POWER SWITCH
2. GRAPHIC DISPLAY
3. ALPHA-NUMERIC DISPLAY
4. TEMPERATURE DISPLAY
5. PROGRAM KEY
6. STEP KEY
7. NUMERIC KEYBOARD
8. START/STOP KEY
9. STOP OVERRIDE KEY
10. VACUUM OVERRIDE KEY
11. AIR OVERRIDE KEY
12. VIEWING LIGHT KEY
13. DOOR DOWN KEY
14. DOOR UP KEY
15. IDLE KEY
16. NIGHT KEY
17. CALIBRATE KEY

FRONT PANEL CONTROLS

POWER SWITCH (1):

Turns the electrical power to the furnace on or off. The Indicator Lamp above the switch will light when the switch is in the "on" position.

GRAPHIC DISPLAY (2):

Graphically represents the status of the furnace in a programmed firing cycle.

While the furnace is in the process of executing each of the primary parameters in a firing cycle (PREHEAT, TEMP INCREASE, HOLD, COOLING AND OVERRIDE), the Indicator Lamp of the GRAPHIC DISPLAY which corresponds to that parameter will flash on and off.

In addition, a brief tone response will be heard each time a different Indicator Lamp on the GRAPHIC DISPLAY lights as the furnace advances through a programmed firing cycle.

ALPHA-NUMERIC DISPLAY (3):

A multiple function display capable of indicating up to 40 individual characters at one time to provide the user with one or more of the following points of information related to the operation of the furnace:

During programming or while reviewing a program, displays the name and programmed value for each firing cycle parameter.

During furnace operation, directs the operator with instructional "prompts" to indicate the action required to perform a selected function.

Indicates whether the furnace is in the process of Heating or Cooling to a programmed Low or High Temperature and the Low or High Temperature value.

During firing cycles with vacuum, displays the actual vacuum level at all times.

Displays the amount of time remaining in the Preheat, Hold and Cooling portions of a firing cycle.

During the Override portion of a firing cycle, displays the amount of override time which has elapsed.

Shows the status of the furnace in the Idle and Night Programs or when any program has been terminated.

Indicates the exact reason for the furnace rejecting a data entry by the operator.

In the event of a furnace malfunction, displays the actual cause for the malfunction.

TEMPERATURE DISPLAY (4):

Indicates the actual temperature within the furnace Muffle, in either degrees Fahrenheit or Celsius, as determined by the position of the °F/°C SELECTOR SWITCH.

PROGRAM KEY (5):

When this key is depressed, the furnace is placed into the Program Mode of operation and will accept firing cycle parameter changes which are entered through the NUMERIC KEYBOARD. This key must always be depressed when entering, changing or reviewing firing cycle parameters in any of the programs.

A brief tone response will be heard and the Indicator Lamp above this key will illuminate when this key is selected.

STEP KEY (6):

Used in conjunction with the PROGRAM Key during programming or when reviewing a program, to advance the ALPHA-NUMERIC DISPLAY to the next parameter in a program. When the last parameter in a program (number 9) has been reached, the display will return to the first parameter of the program (number 1) when the key is depressed the next time.

Depressing the key once will cause the ALPHA-NUMERIC DISPLAY to advance one parameter, while holding the key depressed will cause the display to advance the parameters automatically, one parameter at a time, until the key is released. This feature allows the operator to check all of the parameters of a firing cycle program rapidly, or advance several parameters within a program without having to operate the key many times.

Each time this key is depressed a brief tone response will be heard. When advancing the parameters automatically, a brief tone response will be heard with each parameter advancement.

NUMERIC KEYBOARD (7):

A group of keys labeled zero through nine, including the CLEAR and ENTER Keys, used when programming the furnace. To program a parameter, the numbered keys are depressed to enter the parameter value. As each numbered key is depressed, the number will appear on the ALPHA-NUMERIC DISPLAY, with the numbers advancing from left to right.

If during the entry an error is made, the CLEAR Key should be depressed to remove the incorrect entry from the display. Also during programming, the CLEAR Key may be used to advance the display BACKWARDS one parameter at a time by depressing the key before any of the numbered keys (zero through nine).

Once the correct entry appears on the display, the parameter is placed into the program by depressing the ENTER Key.

Each time a key on the NUMERIC KEYBOARD is depressed, a brief tone response will be heard.

START/STOP KEY (8):

Used either to begin or terminate a selected firing cycle, the Idle, Night or Calibration programs.

When the key is depressed to begin a program, the Indicator Lamp above the key will illuminate and remain illuminated while the selected program is in operation.

When this key is depressed to terminate any program which is in progress, the Indicator Lamp above the key will turn off, vacuum within the furnace Vacuum Chamber will be vented and the furnace Door will open automatically.

Note the Indicator Lamp above this key will turn off once a selected firing cycle program has been completed automatically by the furnace.

A brief tone response will be heard each time this key is depressed.

STOP OVERRIDE KEY (9):

Used during the override period which occurs at the end of the programmed COOL TIME to terminate either the AIR OVERRIDE or VACUUM OVERRIDE function. This key, rather than the START/STOP Key, must be used to stop an override function as it will not terminate the complete firing cycle and will permit the override operation to be used again, if necessary.

A brief tone response will be heard each time this key is depressed.

VACUUM OVERRIDE KEY (10):

Used at the end of a programmed firing cycle to automatically close the furnace Door and raise the Muffle temperature up to an additional 100°F (56°C) higher than the programmed High Temperature, under the vacuum level which has been programmed for the firing cycle in use. The furnace will maintain the programmed High Temperature for 45 seconds after the furnace Door opens automatically at the end of the programmed firing cycle, at which time this override feature may be used.

To operate, determine if a higher temperature or additional time at the original High Temperature is necessary when the furnace Door opens at the end of the programmed firing cycle. If so, momentarily depress the VACUUM OVERRIDE Key. The furnace Door will close, the vacuum pump will operate until the vacuum level programmed for the firing cycle is achieved and then turn off. The Muffle temperature, as indicated on the TEMPERATURE DISPLAY, will increase at the Heat Rate programmed for the firing cycle in use.

Once the desired temperature has been reached, this temperature may be maintained by momentarily depressing the VACUUM OVERRIDE Key. The temperature may be further increased by depressing the VACUUM OVERRIDE Key. Any desired temperature may again be maintained by momentarily depressing the VACUUM OVERRIDE Key. This overriding and holding process may be repeated as many times as desired.

If at any time during the vacuum override procedure it is necessary to open the furnace Door, the STOP OVERRIDE Key should be depressed. By using the STOP OVERRIDE Key, it is possible again to use either the Vacuum Override or Air Override feature.

Each time the VACUUM OVERRIDE Key is depressed, a brief tone response will be heard and the Indicator Lamp above the key will illuminate when the Vacuum Override function is in use.

Note that the Indicator Lamps above the VACUUM OVERRIDE and AIR OVERRIDE Keys will alternately flash on and off during the override period, indicating that either key is operative at that time.

AIR OVERRIDE KEY (11):

Used at the end of a programmed firing cycle to automatically close the furnace Door and raise the Muffle temperature up to an additional 100°F (56°C) higher than the programmed High Temperature, without vacuum. The furnace will maintain the programmed High Temperature for 45 seconds after the furnace Door opens automatically at the end of the programmed firing cycle, at which time this override feature may be used.

To operate, determine if a higher temperature or additional time at the original High Temperature is necessary when the furnace Door opens at the end of the programmed firing cycle. If so, momentarily depress the AIR OVERRIDE Key. The furnace Door will close, and the Muffle temperature, as indicated on the TEMPERATURE DISPLAY, will increase at the Heat Rate programmed for the firing cycle in use.

Once the desired temperature has been reached, this temperature may be maintained by momentarily depressing the AIR OVERRIDE Key. The temperature may be further increased by depressing the AIR OVERRIDE Key. Any desired temperature may again be maintained by momentarily depressing the AIR OVERRIDE Key. This overriding and holding process may be repeated as many times as desired.

If at any time during the Air Override procedure it is necessary to open the furnace Door, the STOP OVERRIDE Key should be depressed. By using the STOP OVERRIDE Key, it is possible again to use either the Air Override or Vacuum Override feature.

Each time the AIR OVERRIDE Key is depressed, a brief tone response will be heard and the Indicator Lamp above the key will illuminate when the Air Override function is in use.

Note that the Indicator Lamps above the VACUUM OVERRIDE and AIR OVERRIDE Keys will alternately flash on and off during the override period, indicating that either key is operative at that time.

VIEWING LIGHT KEY (12):

Turns the Viewing Lights, which illuminate the work area, on or off. During the opening or closing of the furnace Door, the Viewing Lights will be operated automatically by the furnace controls. The VIEWING LIGHT Key will also serve to override the automatic operation of the Viewing Lights to turn them either on or off.

DOOR DOWN KEY (13):

When depressed, this key will activate the motor to open (lower) the furnace Door. Once this key has been depressed, the door will continue to open until the key is depressed a second time, allowing the furnace Door to be stopped at any point along its travel. The DOOR DOWN Key may be used as many times as desired until the Door reaches the fully opened position.

A brief tone response will be heard each time the DOOR DOWN Key is depressed.

DOOR UP KEY (14):

When depressed, this key will activate the motor to close (raise) the furnace Door. Once this key has been depressed, the door will continue to close until the key is depressed a second time, allowing the furnace Door to be stopped at any point along its travel. The DOOR UP Key may be used as many times as desired until the Door reaches the fully closed position.

A brief tone response will be heard each time the DOOR UP Key is depressed.

IDLE KEY (15):

Used to select the Idle Program which is intended to be used during the workday to maintain the furnace at a temperature close to the programmed Low Temperature. This serves to reduce the amount of time required for the furnace to reach the programmed Low Temperature after the furnace Door has been opened.

When the IDLE Key is depressed and the Indicator Lamp above the key is illuminated, the Idle Program will be started once the START/STOP Key is depressed and the Indicator Lamp above the key is illuminated. Both the temperature and vacuum level for the Idle Program are fully programmable by the operator.

A brief tone response will be heard each time the IDLE Key is depressed and the Indicator Lamp above the key will illuminate when the Idle Program has been selected.

Note that the Admiral VPF is equipped with an Automatic Idle feature which becomes operational at the end of each programmed firing cycle. If the Automatic Idle feature has been selected, as outlined under "THE AUTO IDLE FEATURE" on page 25 of this manual, the Indicator Lamp above the IDLE Key will flash on and off while the furnace is "idling" under automatic control.

NIGHT KEY (16):

Used to select the Night Program when the furnace is to remain on overnight or for extended periods of time. Use of the Night Program is recommended during these periods to prevent the accumulation of moisture within the Muffle and also to help extend Muffle life.

When the NIGHT Key is depressed and the Indicator Lamp above the key is illuminated, the Night Program will be started once the START/STOP Key is depressed and the Indicator Lamp above the key is illuminated. The Night Program will maintain the furnace Muffle at a temperature of 590°F (310°C) with the vacuum pump being operated for one minute after the vacuum level within the furnace Vacuum Chamber reaches 27 inches (69 centimeters) of mercury.

A brief tone response will be heard each time the NIGHT Key is depressed and the Indicator Lamp above the key will illuminate when the Night Program has been selected.

CALIBRATE KEY(17):

Used during the furnace calibration procedure to select the Automatic, Self-Adjusting Calibration Program.

Each time the CALIBRATE Key is depressed, a brief tone response will be heard and the Indicator Lamp above the key will illuminate to indicate that the Calibration Program has been selected.

SIDE CONTROLS

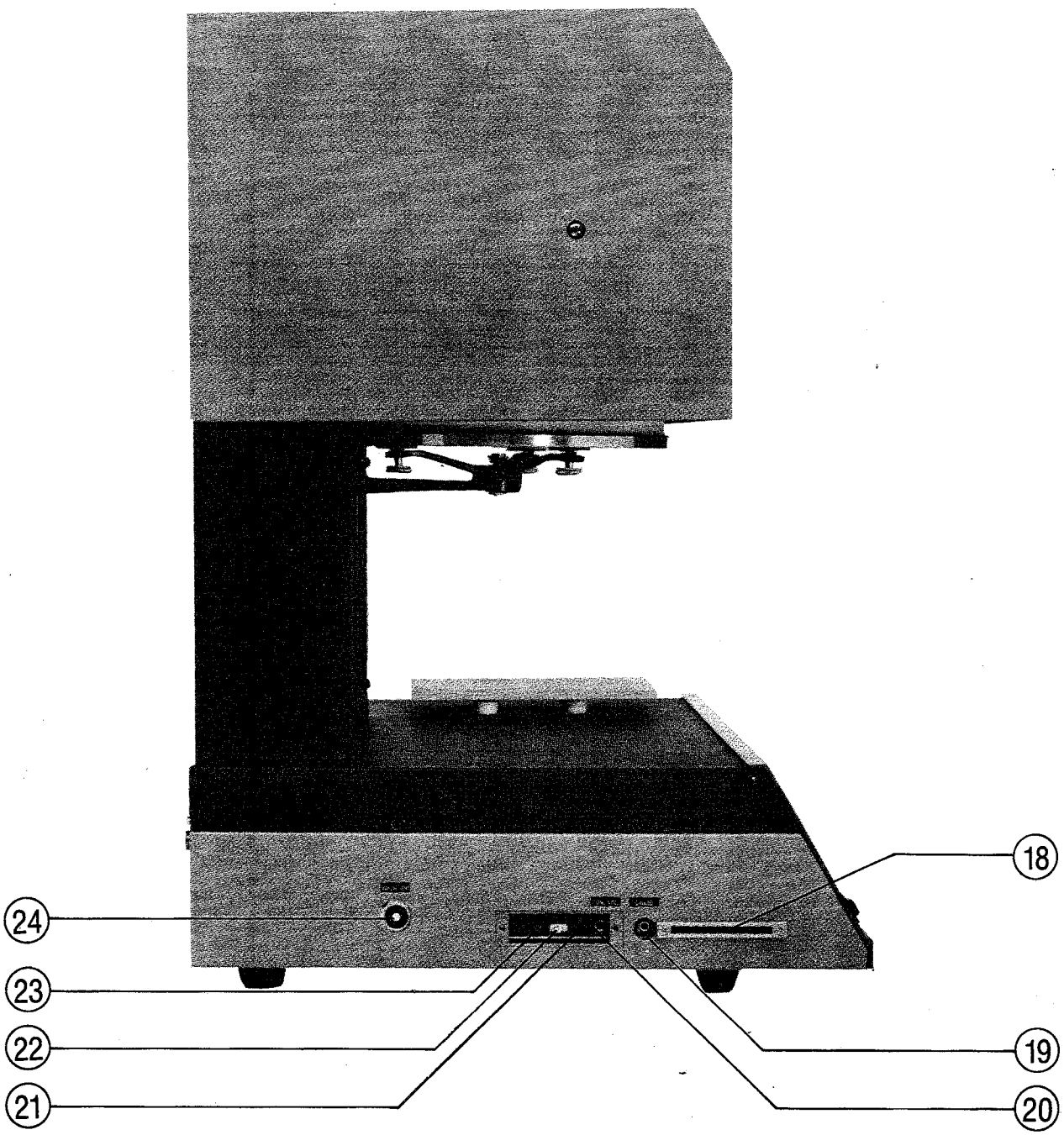

18. PROGRAM MEMORY CARD SLOT
19. CALIBRATION JACK
20. TONE VOLUME ADJUSTMENT
21. LANGUAGE SELECTOR SWITCH
22. °F/°C SELECTOR SWITCH
23. CALIBRATION RESET BUTTON
24. MANUAL VACUUM VENT

SIDE CONTROLS

PROGRAM MEMORY CARD SLOT (18):

Accepts the Program Memory Card which stores all of the firing cycle programs entered by the furnace operator. Each Program Memory Card has the capability of storing up to 999 firing cycle programs and is equipped with a battery back-up system which will maintain the information stored on the card for up to 5 years.

The Program Memory Card is equipped with a Write Protect Switch, located at the end of the card, which when placed in the "on" position prevents changes to the data stored on the card. This feature allows the operator to protect the firing cycle information stored on the card from accidental changes.

Note that the Program Memory Card may be inserted only one way, with the label side of the card upward and the connector side of the card inward.

CALIBRATION JACK (19):

Accepts the plug from the Calibration Instrument used during the furnace Calibration procedure. The Admiral VPF is equipped with an Automatic, Self- Adjusting Calibration system, eliminating the need for manual adjustments by the furnace operator.

TONE VOLUME ADJUSTMENT (20):

Using a small screwdriver, the volume of the tones produced by the furnace may be increased or decreased with this control. To adjust, engage the screwdriver in the slot of the control and rotate the screwdriver clockwise to decrease the tone volume or counter- clockwise to increase the volume, until the desired volume level is obtained.

The TONE VOLUME ADJUSTMENT control is concealed by an Access Cover when not in use. This cover should always be replaced after making adjustments to this control.

LANGUAGE SELECTOR SWITCH (21):

All Admiral Vacuum Porcelain Furnaces are equipped with the capability of operating in any one of nine different languages. When a language has been selected, all information displayed on the ALPHA-NUMERIC DISPLAY will appear in the selected language.

To select a language, rotate the small thumbwheel on the LANGUAGE SELECTOR SWITCH until the code number corresponding to the desired language appears in the "window" of the switch.

Any one of the nine languages programmed into the furnace may be selected at any time. The nine languages and their corresponding code numbers are as follows:

Code Number	Language
0	Japanese
1	English
2	German
3	French
4	Italian
5	Spanish
6	Swedish
7	Norwegian
8	Greek
9,A,B,C,D,E & F	English

The LANGUAGE SELECTOR SWITCH is concealed by an Access Cover when not in use. This cover should always be replaced after making adjustments to this control.

°F/°C SELECTOR SWITCH (22): Used to select either degrees Fahrenheit and inches of mercury or degrees Celsius and centimeters of mercury as the units of measurement for temperature and vacuum on the furnace displays. When the °F/°C SELECTOR SWITCH is moved toward the rear of the furnace, the displays will indicate temperature and vacuum level in degrees Fahrenheit and inches of mercury; whereas positioning the switch toward the front of the furnace will result in display readings in degrees Celsius and centimeters of mercury.

The °F/°C SELECTOR SWITCH is concealed by an Access Cover when not in use. This cover should always be replaced after making adjustments to this control.

CALIBRATION RESET BUTTON (23): Used to restore the furnace temperature calibration to a factory-determined value in the event the "CALIBRATION MALFUNCTION" display appears after several consecutive attempts to perform the furnace Calibration procedure.

To operate, the furnace POWER SWITCH should be in the "off" position and the CALIBRATION RESET BUTTON depressed and held depressed while placing the furnace POWER SWITCH in the "on" position. The CALIBRATION RESET BUTTON should not be released until the furnace TEMPERATURE DISPLAY reading stabilizes.

The CALIBRATION RESET BUTTON is concealed by an Access Cover when not in use. This cover should be replaced after using this control.

MANUAL VACUUM VENT (24): Provided as a means for venting the furnace Vacuum Chamber in the event of a power loss or furnace breakdown. The furnace Vacuum Chamber may be vented by depressing and holding this button.

REAR VIEW

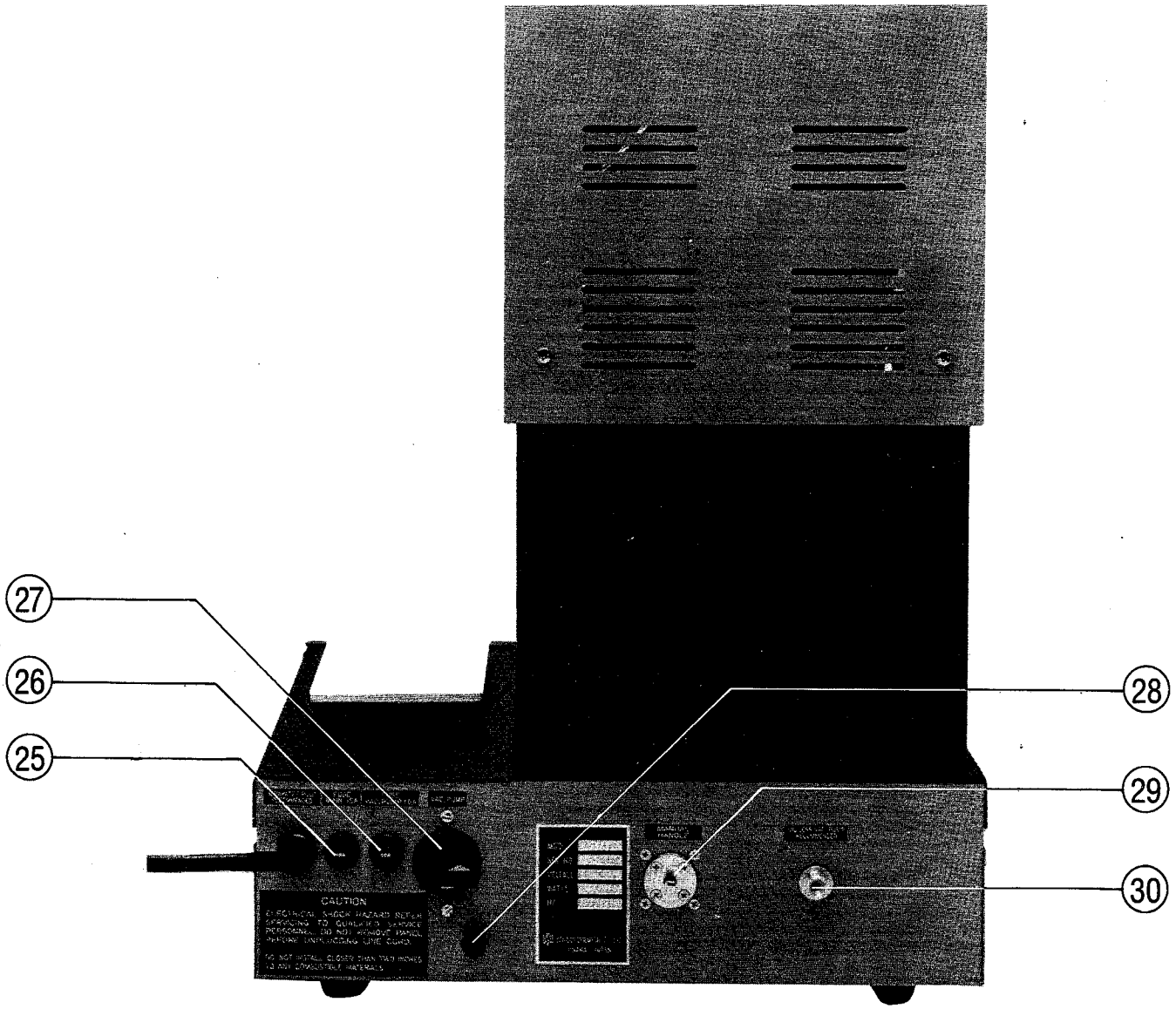

25. MAIN CIRCUIT BREAKER
26. VACUUM PUMP CIRCUIT BREAKER
27. VACUUM PUMP RECEPTACLE
28. ELECTRICAL GROUND BINDING POST
29. MANUAL DOOR CRANK
30. VACUUM HOSE CONNECTOR

REAR PANEL

MAIN CIRCUIT BREAKER (25): A safety device designed to protect the furnace electronics in the event of an electrical short circuit or overload.

When the Circuit Breaker has "tripped," the button of the Circuit Breaker will move outward, exposing a red colored band marked "TRIP." To reset the Circuit Breaker, the Circuit Breaker button should be pressed inward.

VACUUM PUMP CIRCUIT BREAKER (26): An added safety device designed to protect the vacuum pump in the event of an electrical short circuit or overload.

When the Circuit Breaker has "tripped," the button of the Circuit Breaker will move outward, exposing a red colored band marked "TRIP." To reset the Circuit Breaker, the Circuit Breaker button should be pressed inward.

VACUUM PUMP RECEPTACLE (27): Operated automatically by the furnace electronic control system, this outlet provides electrical power for the vacuum pump.

ELECTRICAL GROUND BINDING POST (28): Provided as a means of attaching an electrical ground ("earth") connection to the furnace in the event the line cord ground connection cannot be used or additional equipment grounding is desired.

The furnace must be grounded at all times, either through the line cord ground connection, this binding post connection, or both.

MANUAL DOOR CRANK (29): Provided as a means for manually opening the furnace Door in the event of a line power failure or furnace breakdown.

The MANUAL DOOR CRANK is operated in the following manner:

1. Using the MANUAL VACUUM VENT, vent the furnace Vacuum Chamber completely.
2. Place the supplied Door Crank Handle on the exposed shaft of the Door Crank Mechanism.
3. While pushing the Door Crank Handle toward the front of the furnace, rotate the handle counter-clockwise until the furnace Door has opened the desired distance.

VACUUM HOSE CONNECTOR (30): The vacuum hose from the vacuum pump is (30):connected to this fitting. The fitting is a standard ¼ inch NPT size.

DESCRIPTION OF FIRING CYCLE PARAMETERS

PREHEAT TIME— The length of time, programmable in both minutes and seconds, required for the furnace Door to travel from the initial Preheating position to the fully closed position. The furnace Door will not begin to close until the actual Muffle temperature is within approximately 10°F (6°C) of the programmed Low Temperature.

Any Preheat Time from 10 seconds through 99 minutes and 59 seconds may be programmed into the furnace.

LOW TEMPERATURE— The temperature at which the furnace Door will begin to close for Preheating the restoration. Once the furnace Door has closed completely, the firing cycle will begin at this temperature.

Any Low Temperature between 200°F (100°C) and 2200°F (1200°C) may be programmed into the furnace.

EVACUATION TEMPERATURE— The temperature at which the vacuum pump will automatically turn on to produce the programmed level of vacuum within the furnace Vacuum Chamber. This parameter allows the operator to delay the operation of the vacuum pump until a desired temperature in the firing cycle is reached.

If no delay in the operation of the vacuum pump is desired, the Evacuation Temperature should be programmed with the same value used for the Low Temperature.

Any Evacuation Temperature from 200°F (100°C) to 2200°F (1200°C) may be programmed into the furnace, however, the Evacuation Temperature may not be less than the programmed Low Temperature.

HEAT RATE— The rate of temperature rise within the furnace Muffle, starting from the programmed Low Temperature up to the programmed High Temperature, in degrees per minute. The programmed Heat Rate will be maintained linearly throughout the programmed firing cycle by the furnace electronic controls.

Any Heat Rate from 40°F (20°C) per minute through 400°F (220°C) per minute may be programmed into the furnace.

VACUUM LEVEL— The level of vacuum which will be maintained within the furnace Vacuum Chamber throughout the programmed firing cycle.

The furnace has been designed to precisely maintain the programmed vacuum level automatically for the duration of the firing cycle.

Any vacuum level between 8 inches (20 centimeters) and 30 inches (76 centimeters) of mercury may be programmed into the furnace. For firing cycles where no vacuum is required, zero is programmed as the desired vacuum level.

VENT—

Programmable as either a temperature or time quantity, this is the point during the firing cycle at which the vacuum within the furnace Vacuum Chamber will be automatically vented.

When a temperature has been programmed, this will be the temperature during the firing cycle at which the vacuum will be vented.

When a time has been programmed, this will be the length of time in minutes and seconds over which the vacuum will be maintained during the programmed Hold Time.

These two methods of programming allow the furnace operator to vent vacuum either before or at the programmed High Temperature or maintain vacuum over any portion of the programmed Hold Time.

The vacuum Vent point may be programmed for any temperature between 200°F (100°C) and 2200°F (1200°C) OR any time from zero through 99 minutes and 59 seconds. Note that the furnace control system has been designed to allow the operator to program ONLY ONE method of vacuum venting (time or temperature) and will not allow the operator to program a time which is longer than the programmed Hold Time.

HIGH TEMPERATURE—

The maximum temperature which will be obtained during a programmed firing cycle. Once the High Temperature has been attained, the furnace will maintain this temperature for the duration of the programmed Hold Time.

Any High Temperature between 200°F (100°C) and 2200°F (1200°C) may be programmed into the furnace.

HOLD TIME—

The length of time, programmable in both minutes and seconds over which the programmed High Temperature will be maintained prior to the opening of the furnace Door.

At the end of the programmed Hold Time, the furnace Door will automatically open over the programmed Cool Time.

Any Hold Time from 0 seconds through 99 minutes and 59 seconds may be programmed into the furnace.

COOL TIME—

The length of time, programmable in both minutes and seconds, required for the furnace Door to travel to the fully opened position. At the end of the programmed Hold Time, the furnace Door will open at its maximum speed until it reaches a factory-determined cooling position and then continue to open slowly over the programmed Cool Time.

Any Cool Time from 10 seconds through 99 minutes and 59 seconds may be programmed into the furnace.

ERROR MESSAGES

The Admiral VPF has been designed to provide the operator with a series of messages which report the reason for the furnace not accepting an operator entry during programming and operation.

This feature makes it easier for the operator to identify and correct programming and operating errors.

The Error Messages provided by the furnace, their causes, and the action required by the user are outlined in this section.

1. "CAN'T INPUT"

Causes

Operator attempts to change the parameters of a program while the program is in progress, at a time when changes to that parameter are not permitted.

Action Required by Operator

"In-Cycle" parameter changes are permitted only at the correct times during a firing cycle. Refer to the table of "IN-CYCLE PARAMETER CHANGES" as outlined on page 24 of this manual for the correct timing for these changes.

2. "PROGRAM NOT FOUND"

Causes

a. Operator selects a firing cycle program number which is not presently stored on the Program Memory Card.

b. During programming, operator selects a firing cycle program number which is not presently stored on the Program Memory Card.

Action Required by Operator

a. The operator should select another program number or create a new firing cycle program under the number entered.

b. This Error Message will appear for approximately two seconds after which time the first parameter for the selected firing cycle program number will appear; The operator may then continue to program the selected program number.

3. "DATA OUT OF RANGE"

Causes

Operator attempts to enter a value for a firing cycle parameter which is not within the limits for that parameter.

Action Required by Operator

Operator must select a value for that parameter which is within the limits outlined under "UPPER AND LOWER LIMITS FOR THE NINE FIRING CYCLE PARAMETERS" as outlined on page 24 of this manual.

4. "PARAMETER ERROR X"

Causes

This Error Message appears when the value entered for a firing cycle parameter contradicts the value of a previously entered parameter.

An example of this would be if the operator enters a Low Temperature value which is higher than the High Temperature previously entered for that firing cycle program.

Action Required by Operator

By observing the parameter number which appears to the right of the "PARAMETER ERROR" display, the operator should advance the ALPHA-NUMERIC DISPLAY to this parameter using the STEP Key and enter the correct value for the parameter to correct the contradiction.

5. "NO MEMORY CARD IS INSERTED"

Causes

When programming or operating the furnace this display will appear when the operator enters a firing cycle program number and the Program Memory Card has not been inserted.

Action Required by Operator

Place the furnace Power Switch in the "off" position and insert the Program Memory Card into the Program Memory Card Slot on the side of the furnace. Place the furnace Power Switch in the "on" position and enter the desired firing cycle program number.

6. "MEMORY CARD WRITE PROTECT"

Causes

During programming of the furnace, operator attempts to store a firing cycle program while the Program Memory Card is in the "Write Protect" mode.

Action Required by Operator

Confirm that the firing cycle program is to be stored on the Program Memory Card and disable the "Write Protect" feature of the memory card as outlined under "PROGRAM MEMORY CARD SLOT" on page 13 of this manual.

PROGRAMMING PROGRAMS "1" THROUGH "999"

The Admiral VPF features an advanced integrated circuit Memory Card for the storage of up to 999 complete firing cycle programs per Memory Card. By utilizing additional Memory Cards, the furnace can provide the operator with a virtually unlimited number of firing cycle programs.

Once programmed, the Program Memory Card will retain the firing cycle programs for use as needed, even if the furnace POWER SWITCH is turned off or the Memory Card is removed from the furnace.

Outlined below is the procedure to be followed when programming any of the firing cycle programs "1" through "999." To illustrate this procedure, the following firing cycle parameters will be used for program "1":*

PARAMETER NAME	PARAMETER VALUE
Preheat Time	2 Minutes 30 Seconds
Low Temp	1100°F (593°C)
Evacuation Temp	1100°F (593°C)
Heat Rate	100°F/Minute (56°C/Minute)
Vacuum Level	27 inches (69 centimeters)
Vent	1800°F (982°C)
High Temp	1850°F (1010°C)
Hold Time	0 Minutes 30 Seconds
Cool Time	10 Seconds

If when following this procedure, an Error Message appears on the ALPHA-NUMERIC DISPLAY after depressing the ENTER Key, refer to the description of "ERROR MESSAGES" as outlined on pages 19-20 of this manual.

1. Make certain that the Admiral VPF has been installed as outlined under "INSTALLATION" on page 4 of this manual and that the POWER SWITCH has been placed in the "on" position.

   The ALPHA-NUMERIC DISPLAY will read "SELECT PROGRAM (1-999) ___."

2. Depress the PROGRAM Key. The Indicator Lamp above this key will illuminate, indicating that the furnace is in the Program Mode of operation.

3. Depress the following number key on the NUMERIC KEYBOARD:

   1 - To correspond to the desired Program Number

   If, when making these entries, an incorrect key is depressed, the ALPHA-NUMERIC DISPLAY may be cleared by depressing the CLEAR Key.

   Once the desired Program Number appears correctly on the display, depress the ENTER Key. The selected Program Number will be entered and the ALPHA-NUMERIC DISPLAY will read "PROGRAM NOT FOUND" for approximately two seconds, then read "< 1 > ? 1 PREHEAT TIME Xmin Xsec."

   Note that the number inside the brackets indicates the Program Number which is being used and the number "1" to the left of the parameter name shows that the first parameter of the program is being displayed. In addition, the ? indicates that the value presently programmed for this parameter is outside of the allowable parameter limits; whereas a ¿ would indicate that the value presently programmed for the parameter contradicts the value for a previously programmed parameter.

4. Depress the following number keys on the NUMERIC KEYBOARD:

   0 2 - to correspond to the desired number of minutes for Preheating AND
   3 0 - to correspond to the desired number of seconds for Preheating

   You will notice that after the first key of the NUMERIC KEYBOARD is depressed, a small flashing bar will appear below the parameter being programmed. This bar, called a Cursor, indicates which parameter value is being entered.

Once the desired Preheat Time appears correctly on the display, depress the ENTER Key. This parameter will be entered and the ALPHA-NUMERIC DISPLAY will automatically advance to show the next parameter and read "< 1 > ? 2 LOW TEMP XXXX °F."

5. Depress the following number keys on the NUMERIC KEYBOARD:

   1 1 0 0 - to correspond to the desired Low Temperature

   Once the desired Low Temperature appears correctly on the display, depress the ENTER Key. This parameter will be entered and the ALPHA-NUMERIC DISPLAY will automatically advance to show the next parameter and read "< 1 > ? 4 HEAT RATE XXX °F/min."

6. Depress the following number keys on the NUMERIC KEYBOARD:

   1 0 0 - to correspond to the desired Heat Rate

   Once the desired Heat Rate appears correctly on the display, depress the ENTER Key. This parameter will be entered and the ALPHA-NUMERIC DISPLAY will automatically advance to show the next parameter and read "< 1 > 5 VACUUM LEVEL -XX inHg."

7. Depress the following number keys on the NUMERIC KEYBOARD:

   2 7 - to correspond to the desired Vacuum Level

   Once the desired Vacuum Level appears correctly on the display, depress the ENTER Key. This parameter will be entered and the ALPHA-NUMERIC DISPLAY will automatically advance to show the next parameter and read "< 1 > 6 VENT XXXX °F Xmin Xsec."

8. Depress the following number keys on the NUMERIC KEYBOARD:

   1 8 0 0 - to correspond to the desired Vent Temperature

   Once the desired Vent Temperature appears correctly on the display, depress the ENTER Key. This parameter will be entered and the ALPHA-NUMERIC DISPLAY will read "< 1 > 6 VENT XXXX °F Xmin Xsec."

   Note at this time that the Cursor now appears below the Vent Time, rather than the Vent Temperature. If it was desired to maintain vacuum for a portion of, or for the entire Hold Time, the Vent Time would be programmed at this time by depressing the numbered keys of the NUMERIC KEYBOARD as follows:

   X X - to correspond to the number of minutes desired to maintain vacuum during the Hold Time
   AND
   X X - to correspond to the number of seconds desired to maintain vacuum during the Hold Time

   Once the desired Vent Time appears correctly on the ALPHA- NUMERIC DISPLAY, the ENTER Key would be depressed, the Vent Time parameter would be entered and the Vent Temperature parameter previously programmed would be cleared from the ALPHA-NUMERIC DISPLAY.

   Since the Vent Time will not be programmed for this exercise, the STEP Key should be depressed once and the ALPHA-NUMERIC DISPLAY will automatically advance to the next parameter and read "< 1 > ? 7 HIGH TEMP XXXX °F."

9. Depress the following number keys on the NUMERIC KEYBOARD:

   1 8 5 0 - to correspond to the desired High Temperature

   Once the desired High Temperature appears correctly on the display, depress the ENTER Key. This parameter will be entered and the ALPHA-NUMERIC DISPLAY will automatically advance to the next parameter and read "< 1 > 8 HOLD TIME Xmin Xsec."

10. Depress the following number keys on the NUMERIC KEYBOARD:

    0 0 - to correspond to the desired number of minutes to maintain the High Temperature
    AND
    3 0 - to correspond to the desired number of seconds to maintain the High Temperature

    Once the desired Hold Time appears correctly on the display, depress the ENTER Key. This parameter will be entered and the ALPHA-NUMERIC DISPLAY will automatically advance to the next parameter and read "< 1 > ? 9 COOL TIME Xmin Xsec."

11. Depress the following number keys on the NUMERIC KEYBOARD:

    0 0 - to correspond to the desired number of minutes for Cooling
    AND
    3 0 - to correspond to the desired number of seconds for Cooling

    Once the desired Cool Time appears correctly on the display, depress the ENTER Key. This parameter will be entered and the ALPHA-NUMERIC DISPLAY will now read "STORE ENTRIES ?."

    This now prompts the operator to confirm that the programmed parameters are to be stored on the Program Memory Card for Program Number "1."

    To store the programmed entries, the ENTER Key should be depressed. The furnace will confirm the entry with a series of brief tone responses and the ALPHA-NUMERIC DISPLAY will read "SELECT PROGRAM (1-999) ___."

    If it was not desirable to store the programmed entries, the ENTER Key would *not* be depressed and instead the PROGRAM Key would be depressed, returning the ALPHA-NUMERIC DISPLAY to read "SELECT PROGRAM (1-999) ___."

12. At this time, all parameters for Program "1" should be checked for entry errors by depressing the 1 Key on the NUMERIC KEYBOARD followed by the ENTER Key. The STEP Key should now be used to advance through the program, one parameter at a time, checking all entries.

    If a programming error is found, it may be corrected by depressing the keys on the NUMERIC KEYBOARD which correspond to the correct value and then depressing the ENTER Key. The correct value will automatically replace the value previously entered.

    The STEP Key should then be used to advance the ALPHA- NUMERIC DISPLAY until the display reads "STORE ENTRIES ?" at which time the ENTER Key should be depressed to confirm the parameter changes.

13. Depress the PROGRAM Key. The Indicator Lamp above the key will turn off and the ALPHA-NUMERIC DISPLAY will read "SELECT PROGRAM (1-999)."

14. Program "1" has now been completely programmed and may be used to perform the programmed firing cycle by depressing the 1 Key on the NUMERIC KEYBOARD followed by the ENTER Key and then the START/STOP Key.

    Once the START/STOP Key has been depressed to begin a programmed firing cycle, the ALPHA-NUMERIC DISPLAY will read either "HEATING TO XXXX °F" or "COOLING TO XXXX °F" to show that the furnace is in the process of either heating or cooling to the programmed Low Temperature. The firing cycle will not begin until the actual Muffle temperature is within approximately 10°F (6°C) of the programmed Low Temperature.

    Programs "2" through "999" are programmed using the same procedure outlined for Program "1" in this section.

***NOTE:** The procedure illustrated in this section uses degrees Fahrenheit for temperature and inches of mercury for vacuum. If the furnace is being used with the °F/°C SELECTOR SWITCH in the °C position, degrees Celsius for temperature and centimeters of mercury for vacuum (numbers in parentheses) should be used.

UPPER AND LOWER LIMITS FOR THE NINE FIRING CYCLE PARAMETERS

Parameter Number	Parameter	Lower Limit	Upper Limit
1	PREHEAT TIME	10 SECONDS	99 MINUTES 59 SECONDS
2	LOW TEMP	200°F (100°C)	2200°F (1200°C)
3	EVACUATION TEMP	200°F (100°C)	2200°F (1200°C)
4	HEAT RATE	40°F (20°C)/MINUTE	400°F (220°C)/MINUTE
5	VACUUM LEVEL	0 OR 8 inHg (20 cmHg)	30 inHg (76 cmHg)
6	VENT	200°F (100°C) 0 SECONDS	2200°F (1200°C) OR 99 MINUTES 59 SECONDS
7	HIGH TEMP	200°F (100°C)	2200°F (1200°C)
8	HOLD TIME	0 SECONDS	99 MINUTES 59 SECONDS
9	COOL TIME	10 SECONDS	99 MINUTES 59 SECONDS

NOTE: When a Vacuum Level of zero (0) is programmed, the Vent and Evacuation Temperature parameters automatically will not be displayed during programming or when reviewing parameters.

"IN-CYCLE" PARAMETER CHANGES

The Admiral VPF has been designed to provide maximum flexibility by permitting the operator to change any firing cycle parameter while a firing cycle is in progress, *unless the parameter* to be changed *has been reached* in the firing cycle.

Certain firing cycle parameters may or may not be changed during a programmed firing cycle, as outlined below:

1. The Preheat Time can be changed during the preheating portion of the firing cycle.

2. The High Temperature may be changed during the Hold Time.

3. Parameter changes are not permitted during the override or cooling portions of the firing cycle.

Note that "in-cycle" parameter changes are only temporary and the program parameters will be returned to their original values once the firing cycle has been completed.

THE "AUTO IDLE" FEATURE

The Admiral VPF has been equipped with the capability of returning to the Low Temperature which has been programmed for the firing cycle in use and automatically closing the furnace Door.

This "Auto Idle" feature provides the operator with a method for automatically maintaining an "idle" temperature, without the need to select the furnace Idle Program and depressing the START/STOP Key.

Once the furnace Door closes under the control of the "Auto Idle" feature, the Low Temperature for the firing cycle program which was in use will be maintained for a period of 90 minutes, after which time the furnace will automatically stop heating and the Muffle will slowly cool to ambient temperature.

The operator has the option of turning this "Auto Idle" feature either on or off each time the furnace POWER SWITCH is placed in the "on" position by following the procedure outlined below.

1. With the furnace POWER SWITCH in the "on" position, make certain that the PROGRAM Key has not been selected and that the Indicator Lamp above the key is not illuminated.

2. Depress the following number keys on the NUMERIC KEYBOARD:

   0 0 0 - to access the Auto Idle feature

   Once the above code appears correctly on the ALPHA-NUMERIC DISPLAY, depress the ENTER Key. The ALPHA-NUMERIC DISPLAY will then read "AUTO IDLE ?."

3. To turn the "Auto Idle" feature on, depress the ENTER Key.

4. To turn the "Auto Idle" feature off, depress the CLEAR Key.

5. The ALPHA-NUMERIC DISPLAY will return to read "SELECT PROGRAM (1-999)."

Once the "Auto Idle" feature has been activated, the furnace Muffle will cool to the Low Temperature which has been programmed for firing cycle last used, the furnace Door will automatically close and the Low Temperature will be maintained for 90 minutes. The Indicator Lamp above the IDLE Key will flash on and off whenever the "Auto Idle" feature is in operation.

If the "Auto Idle" feature has not been activated, the furnace Muffle will cool to ambient temperature with the furnace Door open at the completion of each programmed firing cycle.

PROGRAMMING THE IDLE PROGRAM

The Idle Program on the Admiral VPF may be programmed by the operator for both temperature and vacuum using the procedure outlined in this section.

To illustrate the procedure for programming the Idle Program, an Idle Temperature of 1000°F (538°C) and Vacuum Level of 27 inches (69 centimeters) of mercury will be used.*

1. With the furnace POWER SWITCH in the "on" position, depress the PROGRAM Key. The Indicator Lamp above this key will illuminate to indicate that the furnace is in the Program Mode of operation and the ALPHA-NUMERIC DISPLAY will read "SELECT PROGRAM (1-999)."

2. Depress the IDLE Key. The Indicator Lamp above this key will illuminate to indicate that the Idle Program has been selected and the ALPHA-NUMERIC DISPLAY will read "IDLE XXXX °F - XX inHg."

   The Idle Temperature and Vacuum Level presently programmed for the Idle Program will appear on the ALPHA-NUMERIC DISPLAY.

3. Depress the following number keys on the NUMERIC KEYBOARD:

   1 0 0 0 - to correspond to the desired Idle Temperature

   Once the desired Idle Temperature appears correctly on the ALPHA-NUMERIC DISPLAY, depress the ENTER Key. This parameter will be entered and the Cursor will move to the vacuum level area of the ALPHA-NUMERIC DISPLAY.

4. Depress the following number keys on the NUMERIC KEYBOARD:

   2 7 - to correspond to the desired Vacuum Level for the Idle Program

   Once the desired Vacuum Level appears correctly on the ALPHA-NUMERIC DISPLAY, depress the ENTER Key. This parameter will be entered and the Cursor will return to the temperature area of the ALPHA-NUMERIC DISPLAY.

5. Depress the PROGRAM Key. The Indicator Lamp above this key will turn off.

***NOTE:** The procedure illustrated in this section uses degrees Fahrenheit for temperature and inches of mercury for vacuum. If the furnace is being used with the °F/°C SELECTOR SWITCH in the °C position, degrees Celsius for temperature and centimeters of mercury for vacuum (numbers in parentheses) should be used.

OPERATING THE IDLE PROGRAM

Once the Idle Program has been programmed as outlined under "PROGRAMMING THE IDLE PROGRAM" in the preceding section of this manual, it may be operated in the following manner:

1. With the furnace POWER SWITCH in the "on" position, make certain that the PROGRAM Key has not been selected and that the Indicator Lamp above the key is not illuminated.

2. Depress the IDLE Key. The Indicator Lamp above the key will illuminate to indicate that the Idle Program has been selected and the ALPHA-NUMERIC DISPLAY will read "PUSH START BUTTON."

3. Depress the START/STOP Key. The Indicator Lamp above the key will illuminate to indicate that the Idle Program is in operation, the furnace Door will begin to close, the ALPHA- NUMERIC DISPLAY will read "IDLE - XX inHg" and the DIGITAL DISPLAY will indicate the actual Muffle temperature.

4. If vacuum has been programmed for the Idle Program, the vacuum pump will turn on as soon as the furnace Door closes completely. The vacuum pump will operate until the programmed Vacuum Level is achieved and then turn off automatically. If a Vacuum Level greater than 27 inches (69 centimeters) of mercury is programmed, but the programmed Vacuum Level is not achieved, the vacuum pump will operate for one minute after reaching 27 inches (69 centimeters) of mercury and then turn off. The vacuum pump will turn on and off as required to maintain the programmed Vacuum Level.

5. To stop the Idle Program, depress the START/STOP Key. The Indicator Lamp above the key will turn off, vacuum within the furnace Vacuum Chamber will be vented (if vacuum has been programmed) and the furnace Door will open automatically.

OPERATING THE NIGHT PROGRAM

The Night Program is a fixed program which will maintain the furnace Muffle at a temperature of 590°F (310°C) under a vacuum.

The Night Program may be operated in the following manner:

1. With the furnace POWER SWITCH in the "on" position, make certain that the PROGRAM Key has not been selected and that the Indicator Lamp above the key is not illuminated.

2. Depress the NIGHT Key. The Indicator Lamp above this key will illuminate to indicate that the Night Program has been selected and the ALPHA-NUMERIC DISPLAY will read "PUSH START BUTTON."

3. Depress the START/STOP Key. The Indicator Lamp above this key will illuminate to indicate that the Night Program is in operation, the ALPHA-NUMERIC DISPLAY will read "NIGHT - XX inHg," the DIGITAL DISPLAY will indicate the actual Muffle temperature and the furnace Door will begin to close.

4. Once the furnace Door closes completely, the vacuum pump will turn on and operate for one minute after the Vacuum Level reaches 27 inches (69 centimeters) of mercury and then turn off. Once the vacuum pump turns off, it will not turn on again, even if the Vacuum Level within the furnace Vacuum Chamber drops.

5. To stop the Night Program, depress the START/STOP Key. The Indicator Lamp above the key will turn off, vacuum within the furnace Vacuum Chamber will be vented and the furnace Door will open automatically.

CALIBRATION

Your Admiral VPF has been factory tested and calibrated. However, it is recommended that the calibration be checked prior to initial operation and once each month as part of normal furnace maintenance.

The Admiral features an Automatic, Self-Adjusting Calibration system which performs the calibration process electronically, eliminating the need for manual adjustments by the operator.

To calibrate the furnace, the Calibration procedure outlined below should used:

1. Prepare the Calibration Instrument by bridging the electrodes of the instrument using pure silver wire as shown in the photograph on page 29 of this section.

2. Using the DOOR DOWN Key, open the furnace Door completely and remove the Door Brick Platform from the Door.

3. Place the Calibration Instrument on the furnace Door within the raised ridge.

4. Make certain that the PROGRAM Key has not been selected and that the Indicator Lamp above the key is not illuminated.

5. Depress the CALIBRATE Key. The Indicator Lamp above the key will illuminate to indicate that the Calibration Program has been selected and the ALPHA-NUMERIC DISPLAY will read "INSERT CALIBRATION PLUG."

6. Insert the Plug of the Calibration Instrument into the Calibrate Jack located on the left side of the furnace. The ALPHA-NUMERIC DISPLAY will read "PUSH START BUTTON."

7. Depress the START/STOP Key. The Indicator Lamp above the key will illuminate to indicate that the Calibration Program is in operation, the ALPHA-NUMERIC DISPLAY will read "CALIBRATING" and the DIGITAL DISPLAY will indicate the actual Muffle temperature.

8. When the actual Muffle temperature, as indicated on the DIGITAL DISPLAY, reaches 1300°F (704°C), the furnace Door will automatically close and the Muffle temperature will begin to increase.

9. When the pure silver wire across the electrodes of the Calibration Instrument melts, the actual Muffle temperature is 1760°F (960°C). The furnace will automatically adjust the DIGITAL DISPLAY to indicate 1760°F, or 960°C if the °F/°C SELECTOR SWITCH is in the °C position, a tone response will be heard and the furnace Door will automatically open.

10. The Calibration procedure is now complete. The Calibration Instrument may now be unplugged and removed from the furnace Door and the Door Brick Platform replaced.

IMPORTANT NOTE: If during the furnace Calibration procedure, the ALPHA-NUMERIC DISPLAY reads "CALIBRATION MALFUNCTION," the following items should be checked:

1. **Make certain that the pure silver wire has been wrapped tightly around the electrodes of the Calibration Instrument three times and then crimped.**

2. **Make certain that the electrodes of the Calibration Instrument have been scraped clean prior to use.**

If after performing the above steps this "malfunction" display occurs three consecutive times, refer to the description of "CALIBRATION MALFUNCTION" as outlined under "THE SELF-DIAGNOSTIC SYSTEM" on pages 31-33 of this manual.

CALIBRATION INSTRUMENT PREPARATION

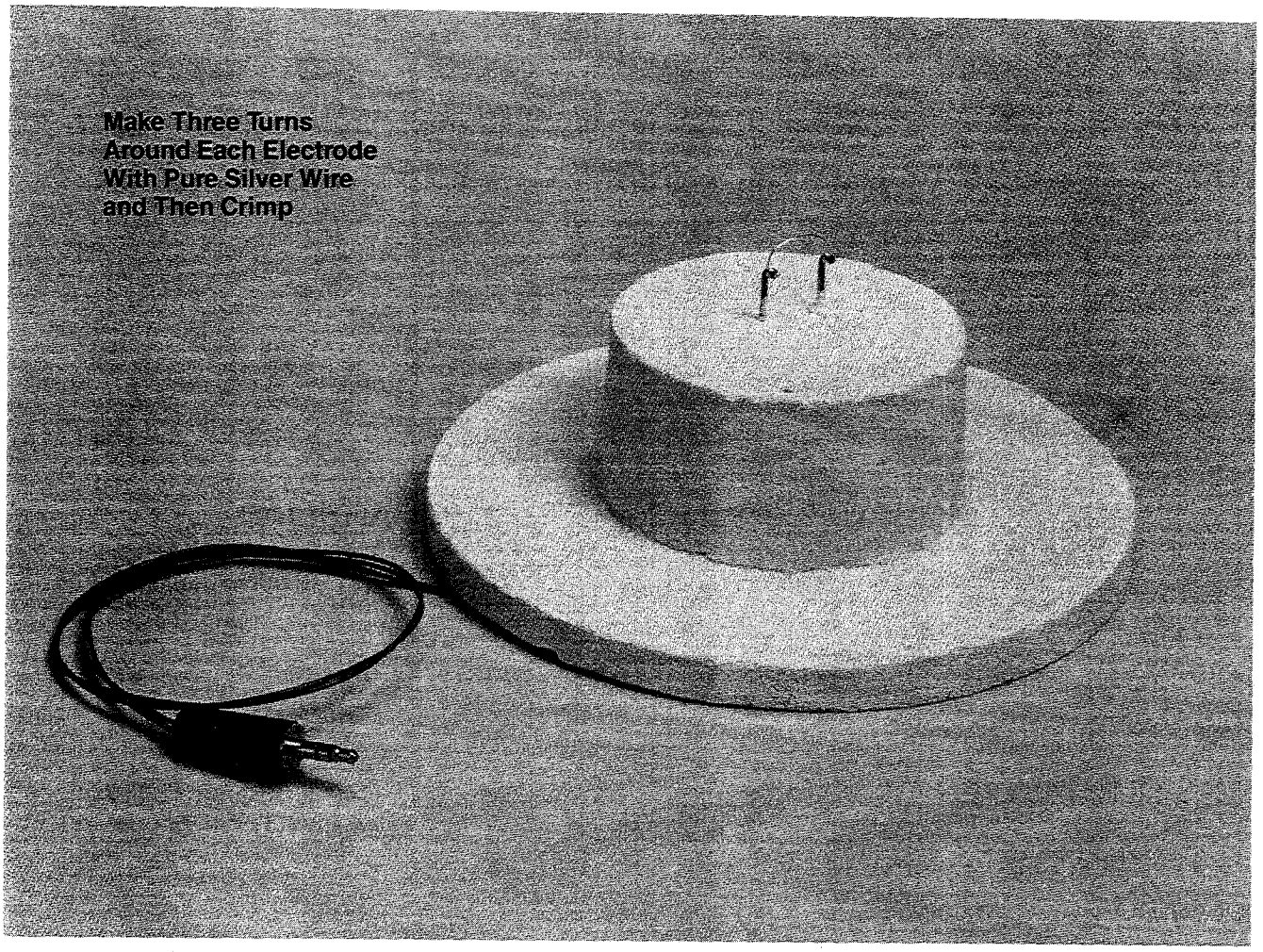

Bridge the electrodes of the Calibration Instrument with pure Silver Wire as shown above. The wire should be wrapped tightly around each electrode three times, leaving a small upward loop of wire between the electrodes.

It is IMPORTANT not to stretch the wire between the electrodes.

TRANSFERRING PROGRAMS

The Admiral VPF has the added capability of transferring (copying) the entire contents of a firing cycle program to another program number.

This capability allows the operator to produce a "basic" firing cycle program, then transfer the program to other program numbers where it can be modified to meet specific firing requirements, thus making the setup of many firing cycle programs a quick and simple process.

To transfer firing cycle programs in the Admiral, the following procedure should be used:

1. With the furnace POWER SWITCH in the "on" position, depress the PROGRAM Key. The Indicator Lamp above this key will illuminate to indicate that the furnace is in the Program Mode and the ALPHA-NUMERIC DISPLAY will read "SELECT PROGRAM (1-999) ___."

2. Depress the following number keys on the NUMERIC KEYBOARD:

   0 0 0 - to access the Transfer Program

   Once the above code appears correctly on the ALPHA-NUMERIC DISPLAY, depress the ENTER Key. The ALPHA-NUMERIC DISPLAY will then read "PROGRAM TRANSFER _____->->-> _____."

3. Depress the number keys on the NUMERIC KEYBOARD which correspond to the number of the Program which is to be transferred.

   Once the number of the program which is to be transferred appears correctly on the ALPHA-NUMERIC DISPLAY, depress the ENTER Key.

4. Depress the number keys on the NUMERIC KEYBOARD which correspond to the number of the Program which is to receive the transferred Program.

   Once the number of the Program which is to receive the transferred Program appears correctly on the ALPHA-NUMERIC DISPLAY, depress the ENTER Key.

5. The arrows on the ALPHA-NUMERIC DISPLAY will flash in sequence from left to right to show the Program Transfer being made. Once the transfer is complete, the ALPHA- NUMERIC DISPLAY will again read "PROGRAM TRANSFER _____->->-> _____" and the Program number areas of the display will be cleared.

6. Depress the PROGRAM Key. The Indicator Lamp above the key will turn off, indicating that the furnace is no longer in the Program Mode and the ALPHA-NUMERIC DISPLAY will read "SELECT PROGRAM (1-999) ___." The Program Transfer is now complete.

THE SELF-DIAGNOSTIC SYSTEM

The Admiral VPF has been designed with a seven point Self-Diagnostic System which continuously monitors the vital functions of the furnace.

In the event a major component in the furnace system malfunctions, a warning tone* will sound and the ALPHA-NUMERIC DISPLAY will indicate the exact nature of the malfunction.

Described in this section are the seven types of "malfunction" displays which may be indicated by the furnace and the corrective action which must be taken if one should appear.

"CPU MALFUNCTION X"

This display will appear with a warning tone* and a Code Number in place of the "X" indicated above, to indicate five forms of malfunction which may occur with the microprocessor (called a CPU) located on the Control Circuit Board.

When this display appears, the furnace POWER SWITCH should be placed in the "off" position for approximately five minutes and then placed in the "on" position. Should the display reappear after doing this, the following procedures should be followed:

1. The furnace POWER SWITCH should be placed in the "off" position and the CALIBRATION RESET BUTTON depressed and held depressed while placing the furnace POWER SWITCH in the "on" position. The CALIBRATION RESET BUTTON should not be released until the furnace TEMPERATURE DISPLAY stabilizes.**

2. Replace Control Circuit Board.

"EXCESS TEMPERATURE"

In the event the furnace temperature exceeds 2250°F (1230°C), this display will appear, a warning tone* will sound and vacuum within the furnace Vacuum Chamber will be vented.

Causes for this type of malfunction are listed below in order of probability. When replacing components to correct this problem, it is recommended that they be replaced in the order indicated.

1. Defective Solid State Relay.

2. Defective Control Circuit Board.

"PLATFORM MALFUNCTION"

As the furnace Door opens and closes, the furnace control system monitors the travel of the Door. If at any time the furnace Door does not reach the fully opened or fully closed position within the proper period of time, this display will appear and a warning tone will sound.*

Causes for this type of malfunction are listed below in order of probability.

1. An obstruction which prevents the furnace Door from reaching either the fully opened or fully closed position. This obstruction must be removed.

2. A defective Door Up Limit Switch or Door Down Limit Switch.

3. Defective Door Drive Motor.

"HEATER MALFUNCTION"

Once the START/STOP Key is depressed to begin a cycle, the furnace electronic control system monitors the actual Muffle temperature and compares this temperature to the programmed temperature.

If after a predetermined period of time the programmed temperature is not achieved, or the actual Muffle temperature varies excessively from the programmed temperature, this display will appear and a warning tone* will sound.

Causes for this type of malfunction are listed below in order of probability. When replacing components to correct this problem, it is recommended that they be replaced in the order indicated.

1. Defective Muffle.

2. Defective Solid State Relay.

3. Defective Control Circuit Board.

"VACUUM MALFUNCTION"

This display will appear for several reasons related to the vacuum function of the furnace. When the display appears, it will also be followed by a warning tone* and if there is no vacuum detected in the furnace Vacuum Chamber the furnace Door will automatically open. The malfunctions which will cause this display to appear and the required corrective action are outlined below:

1. When a program using vacuum has been started and no vacuum is achieved, this display will appear within approximately 10 seconds after the furnace Door closes. Possible causes are:

   a. Vacuum pump not plugged into the Vacuum Pump Receptacle at the rear of the furnace.

   b. Vacuum pump hose not connected to the Vacuum Hose Connector at the rear of the furnace.

   c. Vacuum Pump Circuit Breaker "tripped."

   d. Defective Vacuum Pump.

   e. Defective Relay Circuit Board.

   f. Defective Control Circuit Board.

2. When a program using vacuum has been started and vacuum is achieved, but a vacuum level of at least 27 inches (69 centimeters) of mercury is not attained within 60 seconds after the furnace Door closes, the possible causes are:

   a. Vacuum pump being used is not providing sufficient vacuum.

   b. Obstructed Brass Vacuum Filter element.

   c. Furnace has a severe vacuum leak.

   d. Defective Control Circuit Board.

3. During a program using vacuum, the vacuum Vent point is reached, but vacuum is not vented within 45 seconds. Possible causes are:

a. Defective Vacuum Vent Valve.

b. Defective Control Circuit Board.

"CALIBRATION MALFUNCTION"

This display appears and a warning tone will sound* during the furnace Calibration procedure if the melting of the pure silver wire across the electrodes of the Calibration Instrument occurs before 1580°F (860°C) or after 1940°F (1060°C). This could occur for one or more of the following reasons:

1. The pure silver wire has not been wrapped tightly around the electrodes of the Calibration Instrument.

2. The electrodes of the Calibration Instrument are covered with oxide and need to be scraped clean prior to use.

3. The Calibration Instrument is defective.

4. The furnace POWER SWITCH should be placed in the "off" position and the CALIBRATION RESET BUTTON depressed and held depressed while placing the furnace POWER SWITCH in the "on" position. The CALIBRATION RESET BUTTON should not be released until the furnace TEMPERATURE DISPLAY stabilizes.**

5. Defective Control Circuit Board.

"THERMOCOUPLE MALFUNCTION"

In the event the furnace Thermocouple fails, this display will appear, a warning tone will sound,* vacuum within the furnace Vacuum Chamber will be vented and the furnace Door will automatically open.

When this display appears, the Thermocouple would almost always be defective and require replacement. However, a defective Control Circuit Board could also cause this malfunction to occur.

*When the warning tone sounds, the CLEAR Key must be depressed to silence the alarm tone.

**If the Calibration is reset using the CALIBRATION RESET BUTTON, the furnace must be recalibrated using the Calibration procedure outlined under "CALIBRATION" on pages 28-29 of this manual prior to use.

ADMIRAL TOP PLATE
(SHOWN WITH UPPER HOUSING COVER REMOVED)

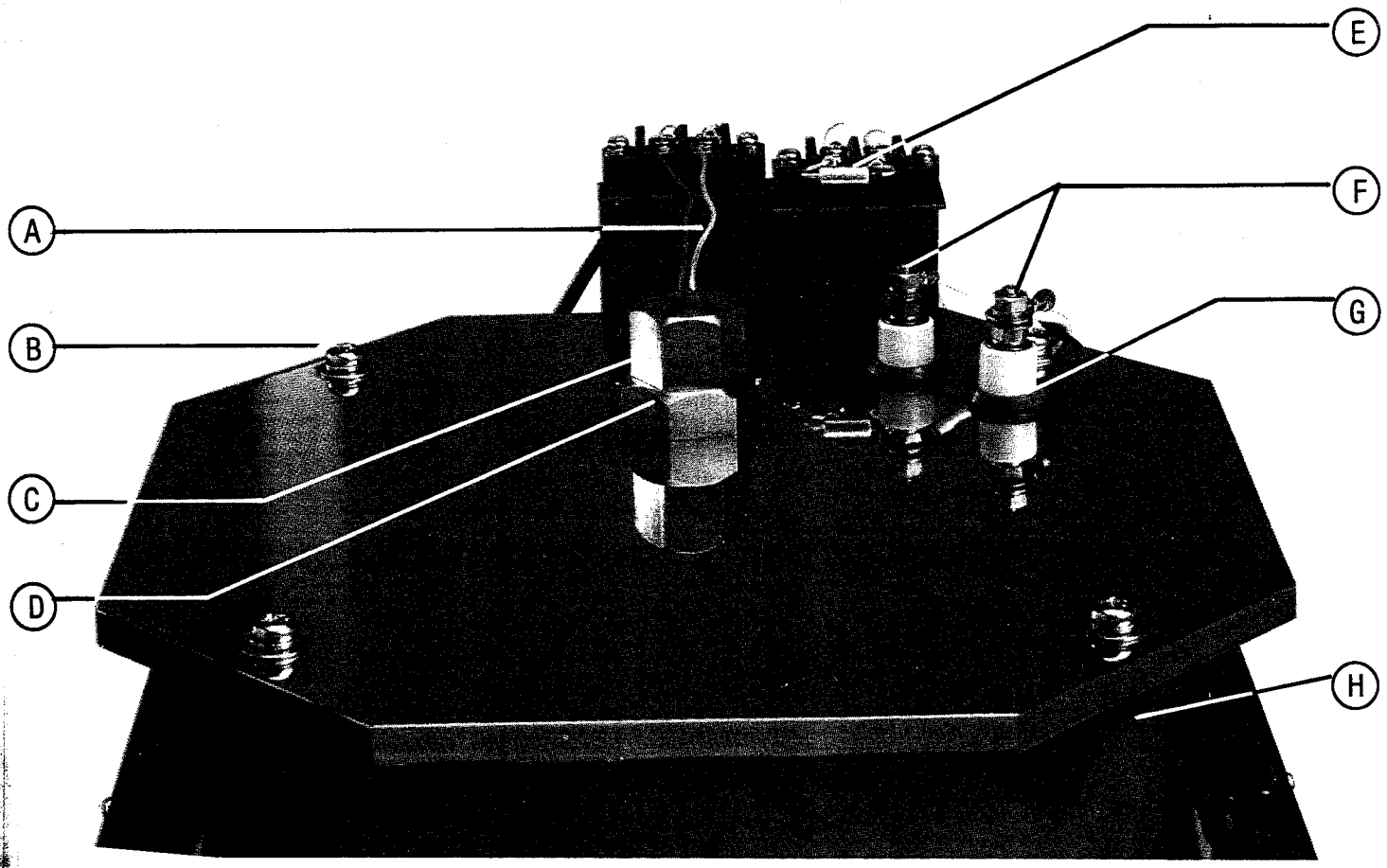

A. THERMOCOUPLE LEADS
B. TOP PLATE SCREW (1 OF 4)
C. THERMOCOUPLE NUT
D. THERMOCOUPLE FITTING
E. OVER-TEMPERATURE FUSE
F. MUFFLE POWER TERMINALS
G. MUFFLE POWER TERMINAL GASKET (1 OF 2)
H. VACUUM CHAMBER

ADMIRAL MUFFLE
(SHOWN MOUNTED ON TOP PLATE)

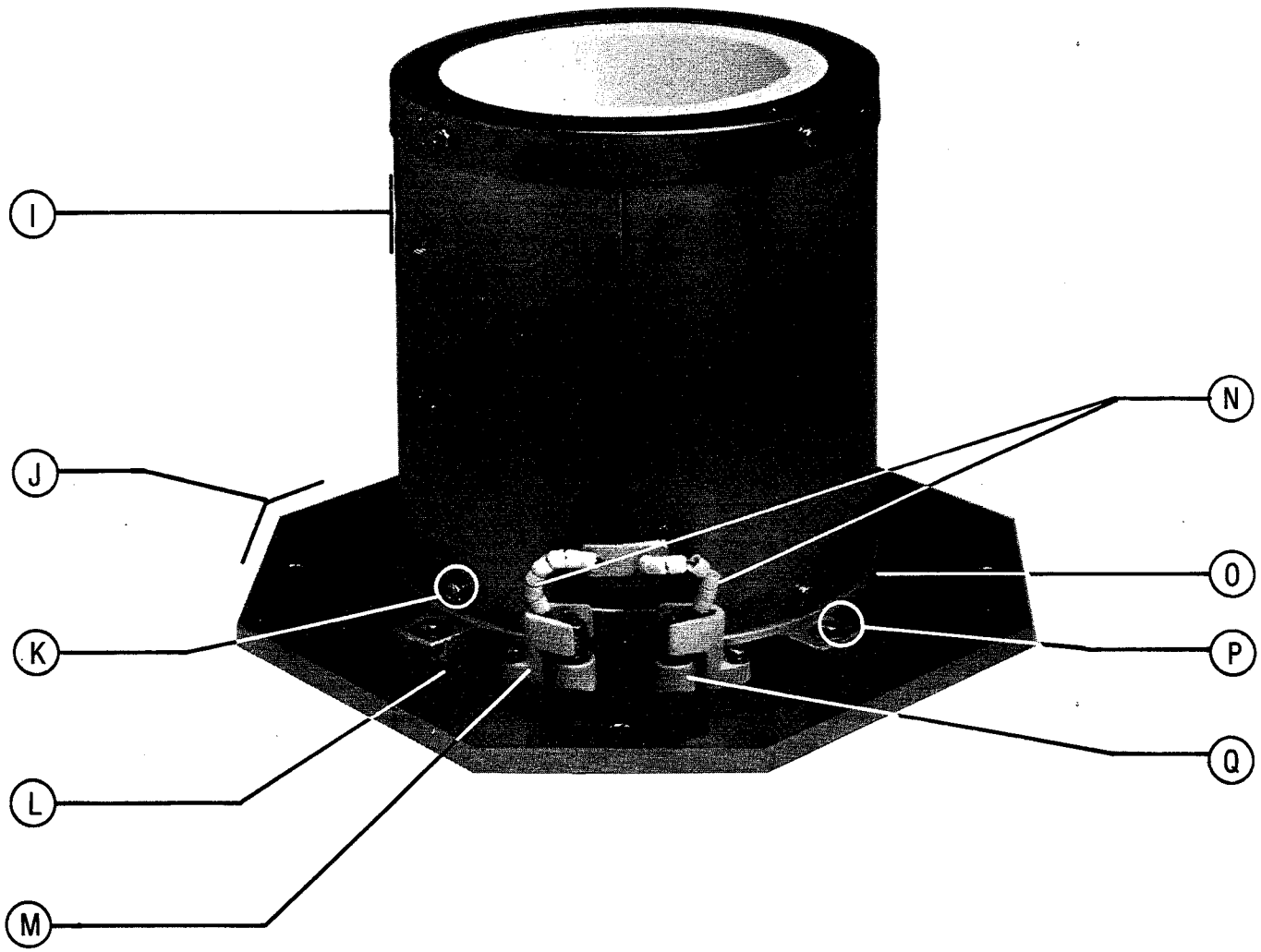

I. MUFFLE
J. TOP PLATE
K. MUFFLE MOUNTING SCREW (1 OF 4)
L. TOP GASKET
M. MUFFLE POWER TERMINAL INSULATOR (1 OF 2)
N. MUFFLE POWER LEADS
O. MUFFLE BASE
P. MUFFLE BASE SCREW (1 OF 4)
Q. MUFFLE POWER TERMINAL (1 OF 2)

ADMIRAL INTERNAL VIEW
(SHOWN WITH LOWER HOUSING COVER REMOVED)

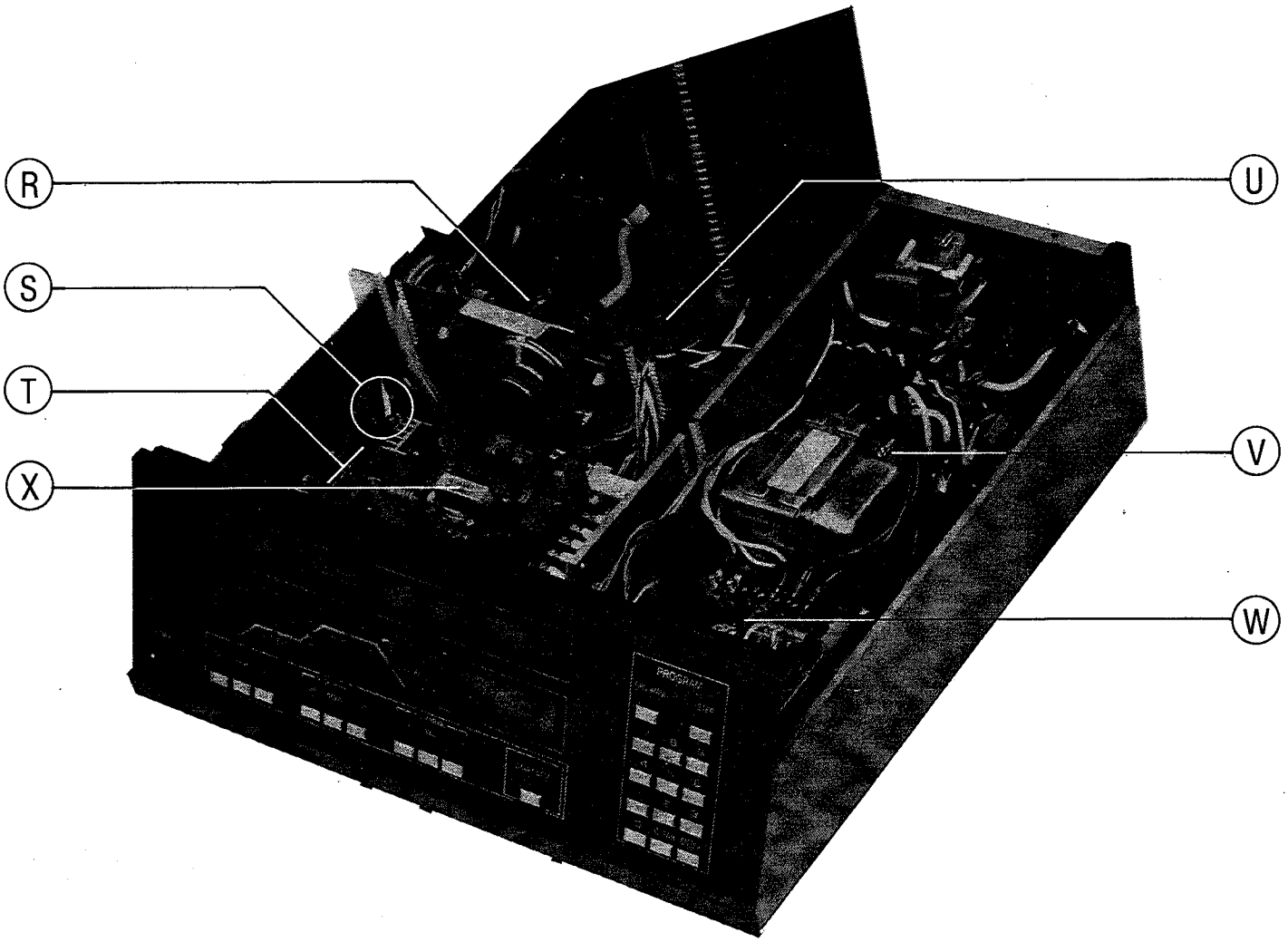

R. VACUUM VALVE ASSEMBLY
S. THERMOCOUPLE TERMINALS (ON CONTROL CIRCUIT BOARD)
T. CONTROL CIRCUIT BOARD
U. DOOR DRIVE MOTOR
V. SOLID STATE RELAY
W. RELAY CIRCUIT BOARD
X. POWER SUPPLY CIRCUIT BOARD

REPLACEMENT OF THE THERMOCOUPLE

1. Press the furnace POWER SWITCH to the "off" position.

2. Unplug the Power Cord from the electrical outlet.

3. With the rear of the furnace facing you, loosen and remove the two screws located at the rear of the Upper Housing Cover. Also loosen and remove the screws located at either side of the Upper Housing Cover.

4. With the front of the furnace facing you, lift the Upper Housing Cover upward and off the furnace.

5. Locate and disconnect the two Thermocouple Leads which are attached to the Terminal Strip at the top of the furnace. Note the position and color coding of the two Thermocouple Leads so that they may be reattached in the same manner.

6. Wile holding the Thermocouple Fitting with one wrench, use a second wrench to loosen the Thermocouple Nut and remove it from the Thermocouple Fitting.

7. Lift the Thermocouple out of the Thermocouple Fitting.

8. Reverse this procedure to install the replacement Thermocouple.

9. Recalibrate the furnace after replacing the Thermocouple, as outlined under "CALIBRATION" on pages 28-29 of this manual.

NOTE: The Thermocouple used in this furnace contains Platinum and may be returned for credit against the purchase of the replacement Thermocouple.

REPLACEMENT OF THE MUFFLE

1. Press the furnace POWER SWITCH to the "off" position.

2. Unplug the Power Cord from the electrical outlet.

3. With the rear of the furnace facing you, loosen and remove the two screws located at the rear of the Upper Housing Cover. Also loosen and remove the screws located at either side of the Upper Housing Cover.

4. With the front of the furnace facing you, lift the Upper Housing Cover upward and off the furnace.

5. Locate and disconnect the two Thermocouple Leads which are attached to the Terminal Strip at the top of the furnace. Note the position and color coding of the two Thermocouple Leads so that they may be reattached in the same manner.

6. Locate and disconnect the two Power Leads which are attached to the two Power Terminals on the Top Plate. Note that the lug on each Power Lead is secured to the Power Terminal with a hex nut on either side. DO NOT attempt to loosen the top hex nut without first holding the bottom hex nut with a wrench or pliers.

7. Loosen and remove the four Top Plate Screws which secure the Top Plate to the Vacuum Chamber.

8. Lift the Top Plate off the Vacuum Chamber and place the Top Plate on a working surface with the open end of the Muffle facing you.

9. Locate the two Muffle Power Terminal Insulators. Loosen and remove the screw which secures each insulator to the Top Plate and remove both insulators.

10. Locate and disconnect the two Muffle Power Leads which are attached to the two Power Terminals on the exposed side of the Top Plate. Note that the lug on each Power Lead is secured to the Power Terminal with a hex nut on either side. DO NOT attempt to loosen the top hex nut without first holding the bottom hex nut with a wrench or pliers.

11. Loosen and remove the four screws which secure the Muffle to the Muffle Base.

12. Carefully lift the Muffle straight off of the Muffle Base which remains attached to the Top Plate. It is important not to "rock" the Muffle from side to side when removing it as this may damage the Thermocouple.

13. Reverse this procedure to install the replacement Muffle. When repositioning the Top Plate on the Vacuum Chamber, make certain that the Top Gasket is properly seated between the Top Plate and the Vacuum Chamber.

14. Recalibrate the furnace after replacing the Thermocouple, as outlined under "CALIBRATION" on pages 28-29 of this manual.

REPLACEMENT OF THE POWER SUPPLY CIRCUIT BOARD

1. With the furnace POWER SWITCH in the "on" position, depress the DOOR UP Key and allow the furnace Door to close completely.

2. Press the furnace POWER SWITCH to the "off" position.

3. Unplug the Power Cord from your electrical outlet.

4. With the front of the furnace facing you, loosen and remove the six screws which secure the two covers located on either side of the Door Lift Arm. Remove these two covers.

5. Loosen and remove the two screws located at the top of the Lower Housing Cover, at the rear of the furnace.

6. While facing each side of the furnace, loosen and remove the three screws located along the edge of the Lower Housing Cover. Note that one screw is located near the furnace Front Panel; while the remaining two screws are located within the recessed portion on the side of the furnace.

7. Raise the rear portion of the Lower Housing Cover slightly and slide it toward the rear of the furnace, then lift the entire Lower Housing Cover upward and off the furnace.

8. Note the position and color coding of the six wires which are connected to the Terminal Strip on the Power Supply Circuit Board so that the wires may be reattached in the same manner in which they are removed. Disconnect the six wires.

9. The Power Supply Circuit Board is held in place by four plastic standoffs with tabs. To release the circuit board from the standoff, use pliers to squeeze the two tabs together while pulling directly upward on the circuit board. The circuit board must be released from each standoff, one at a time, until all four are disengaged.

10. Reverse this procedure to install the replacement Power Supply Circuit Board. When replacing the six wires to the Terminal Strip on the board, make certain that they are reattached in the same manner in which they were removed in Step 8.

11. Recalibrate the furnace as outlined under "CALIBRATION" on pages 28-29 of this manual.

REPLACEMENT OF THE CONTROL CIRCUIT BOARD

1. With the furnace POWER SWITCH in the "on" position, depress the DOOR UP Key and allow the furnace Door to close completely.

2. Press the furnace POWER SWITCH to the "off" position.

3. Unplug the Power Cord from your electrical outlet.

4. Remove the Program Memory Card from the Program Memory Card Slot on the left side of the furnace.

5. With the front of the furnace facing you, loosen and remove the six screws which secure the two covers located on either side of the Door Lift Arm. Remove these two covers.

6. Loosen and remove the two screws located at the top of the Lower Housing Cover, at the rear of the furnace.

7. While facing each side of the furnace, loosen and remove the three screws located along the edge of the Lower Housing Cover. Note that one screw is located near the furnace Front Panel; while the remaining two screws are located within the recessed portion on the side of the furnace.

8. Raise the rear portion of the Lower Housing Cover slightly and slide it toward the rear of the furnace, then lift the entire Lower Housing Cover upward and off the furnace.

9. Loosen and remove the two screws which secure the furnace Front Panel. These screws are located on the bottom of the furnace along the front edge.

10. Unplug the two Connectors for the flat cables which interconnect the Alpha-Numeric Display Board and Front Circuit Board to the Control Circuit Board. To release these connectors, push the tabs located at each end of the Connector outward.

11. Once the Flat Cables have been disconnected, lift the furnace Front Panel upward and off the furnace. Position the furnace Front Panel, face down, on a work surface in front of the furnace.

12. Unplug the Connector for the two wires which interconnect the Alpha-Numeric Display Board and the Control Circuit Board.

13. Unplug the Connector for the wires which interconnect the Power Supply Circuit Board and the Control Circuit Board by pulling directly upward on the Connector.

14. The Power Supply Circuit Board is held in place by four plastic standoffs with tabs. To release the circuit board from the standoff, use pliers to squeeze the two tabs together while pulling directly upward on the circuit board. The circuit board must be released from each standoff, one at a time, until all four are disengaged.

    Position the Power Supply Circuit Board toward the right side of the furnace so that it will not interfere with the replacement of the Control Circuit Board.

15. Unplug the two small Connectors located at the rear of the Control Circuit Board by pulling directly upward on each Connector.

16. Unplug the large Connector located at the rear of the Control Circuit Board by squeezing the tabs located at the ends of the Connector together while pulling directly upward on the Connector.

17. Locate and disconnect the two Thermocouple Wires which are connected to the Terminals at the rear of the Control Circuit Board. Before removing these wires, note the color coding on each so that they may be reconnected in the same manner in which they are removed.

18. Locate and disconnect the Vacuum Tubing connected to the Vacuum Transducer at the rear of the Control Circuit Board. Note that the tubing is secured to the Vacuum Transducer with a small spring clamp, which must first be slid back along the tubing before the tubing can be disconnected.

19. The Control Circuit Board is held in place by six plastic standoffs with tabs. To release the circuit board from the standoffs, use pliers to squeeze the two tabs together while pulling directly upward on the circuit board. The circuit board must be released from each standoff, one at a time, until all six are disengaged.

20. Once the Control Circuit Board has been removed from the furnace chassis, turn the circuit board over to expose the underside (non-component side) of the board.

    Following the procedure used to release the Control Circuit Board from the standoffs, release the four standoffs which secured the Power Supply Circuit Board to the Control Circuit Board. Install these four standoffs on the replacement Control Circuit Board in the same position from which they were removed.

21. Reverse this procedure to install the replacement Control Circuit Board.

22. The furnace POWER SWITCH should be placed in the "off" position and the CALIBRATION RESET BUTTON depressed and held depressed while placing the furnace POWER SWITCH in the "on" position. The CALIBRATION RESET BUTTON should not be released until the furnace TEMPERATURE DISPLAY stabilizes.

23. Recalibrate the furnace as outlined under "CALIBRATION" on pages 28-29 of this manual.

REPLACEMENT OF THE SOLID STATE RELAY

1. With the furnace POWER SWITCH in the "on" position, depress the DOOR UP Key and allow the furnace Door to close completely.

2. Press the furnace POWER SWITCH to the "off" position.

3. Unplug the Power Cord from your electrical outlet.

4. With the front of the furnace facing you, loosen and remove the six screws which secure the two covers located on either side of the Door Lift Arm. Remove these two covers.

5. Loosen and remove the two screws located at the top of the Lower Housing Cover, at the rear of the furnace.

6. While facing each side of the furnace, loosen and remove the three screws located along the edge of the Lower Housing Cover. Note that one screw is located near the furnace Front Panel; while the remaining two screws are located within the recessed portion on the side of the furnace.

7. Raise the rear portion of the Lower Housing Cover slightly and slide it toward the rear of the furnace, then lift the entire Lower Housing Cover upward and off the furnace.

8. Locate the Solid State Relay and note the position and color coding of the wires on each of the four terminals so that they may be reattached in the same manner in which they were removed. Disconnect the wires.

9. Loosen and remove the two screws which secure the Solid State Relay to the chassis of the furnace. Remove the Solid State Relay.

10. Reverse this procedure to install the replacement Solid State Relay, replacing each wire on the terminal from which it was removed on the original part.

11. Recalibrate the furnace as outlined under "CALIBRATION" on pages 28-29 of this manual.

REPLACEMENT OF THE RELAY CIRCUIT BOARD

1. With the furnace POWER SWITCH in the "on" position, depress the DOOR UP Key and allow the furnace Door to close completely.

2. Press the furnace POWER SWITCH to the "off" position.

3. Unplug the Power Cord from your electrical outlet.

4. With the front of the furnace facing you, loosen and remove the six screws which secure the two covers located on either side of the Door Lift Arm. Remove these two covers.

5. Loosen and remove the two screws located at the top of the Lower Housing Cover, at the rear of the furnace.

6. While facing each side of the furnace, loosen and remove the three screws located along the edge of the Lower Housing Cover. Note that one screw is located near the furnace Front Panel; while the remaining two screws are located within the recessed portion on the side of the furnace.

7. Raise the rear portion of the Lower Housing Cover slightly and slide it toward the rear of the furnace, then lift the entire Lower Housing Cover upward and off the furnace.

8. Note the position and color coding of the wires connected to the four terminals of the Large Terminal Strip on the Relay Circuit Board so that they may be reattached in the same manner in which they were removed. Disconnect these wires.

9. Note the position and color coding of the wires connected to the two remaining terminals on the Relay Circuit Board so that they may be reattached in the same manner in which they were removed. Disconnect these wires.

10. Unplug the Connector from the Relay Circuit Board by pulling directly upward on the Connector.

11. Recalibrate the furnace as outlined under "CALIBRATION" on pages 28-29 of this manual.

REPLACEMENT OF THE ALPHA-NUMERIC DISPLAY BOARD

1. With the furnace POWER SWITCH in the "on" position, depress the DOOR UP Key and allow the furnace Door to close completely.

2. Press the furnace POWER SWITCH to the "off" position.

3. Unplug the Power Cord from your electrical outlet.

4. With the front of the furnace facing you, loosen and remove the six screws which secure the two covers located on either side of the Door Lift Arm. Remove these two covers.

5. Loosen and remove the two screws located at the top of the Lower Housing Cover, at the rear of the furnace.

6. While facing each side of the furnace, loosen and remove the three screws located along the edge of the Lower Housing Cover. Note that one screw is located near the furnace Front Panel; while the remaining two screws are located within the recessed portion on the side of the furnace.

7. Raise the rear portion of the Lower Housing Cover slightly and slide it toward the rear of the furnace, then lift the entire Lower Housing Cover upward and off the furnace.

8. Loosen and remove the two screws which secure the furnace Front Panel. These screws are located on the bottom of the furnace along the front edge.

9. Unplug the Connector for the Flat Cable which interconnects the Alpha-Numeric Display Board and the Control Circuit Board. To release this connector, push the tabs located at each end of the Connector outward.

10. Once the Flat Cable has been disconnected, lift the furnace Front Panel upward and off the furnace. Position the furnace Front Panel, face down, on a work surface in front of the furnace.

11. Loosen and remove the four screws which secure the Alpha- Numeric Display Board to the furnace Front Panel. Once the screws have been removed, lift the circuit board away from the furnace Front Panel.

12. Reverse this procedure to install the replacement Alpha- Numeric Display Board.

13. Recalibrate the furnace as outlined under "CALIBRATION" on pages 28-29 of this manual.

REPLACEMENT OF THE FRONT CIRCUIT BOARD

1. With the furnace POWER SWITCH in the "on" position, depress the DOOR UP Key and allow the furnace Door to close completely.

2. Press the furnace POWER SWITCH to the "off" position.

3. Unplug the Power Cord from your electrical outlet.

4. With the front of the furnace facing you, loosen and remove the six screws which secure the two covers located on either side of the Door Lift Arm. Remove these two covers.

5. Loosen and remove the two screws located at the top of the Lower Housing Cover, at the rear of the furnace.

6. While facing each side of the furnace, loosen and remove the three screws located along the edge of the Lower Housing Cover. Note that one screw is located near the furnace Front Panel; while the remaining two screws are located within the recessed portion on the side of the furnace.

7. Raise the rear portion of the Lower Housing Cover slightly and slide it toward the rear of the furnace, then lift the entire Lower Housing Cover upward and off the furnace.

8. Loosen and remove the two screws which secure the furnace Front Panel. These screws are located on the bottom of the furnace along the front edge.

9. Unplug the Connector for the Flat Cable which interconnects the Front Circuit Board and the Control Circuit Board. To release this connector, push the tabs located at each end of the Connector outward.

10. Once the Flat Cable has been disconnected, lift the furnace Front Panel upward and off the furnace. Position the furnace Front Panel, face down, on a work surface in front of the furnace.

11. Loosen and remove the five screws which secure the Front Circuit Board to the furnace Front Panel. Once the screws have been removed, lift the circuit board away from the furnace Front Panel.

12. Reverse this procedure to install the replacement Front Circuit Board.

13. Recalibrate the furnace as outlined under "CALIBRATION" on pages 28-29 of this manual.

ADMIRAL VPF RENEWAL PARTS LIST

Product Number	Part Description
311105	Power Switch
311106	Vacuum Pump Receptacle-100/115V
311107	Vacuum Pump Receptacle-230V
311108	Viewing Lamp (1)
311109	Viewing Lamp Fuse (Pkg of 5)
311110	Noise Filter
476000	Solid State Relay
311610	Relay Circuit Board
311112	Power Transformer-100/115V
311113	Power Transformer-230V
311115	Power Supply Circuit Board
311305	Control Circuit Board-115V
311306	Control Circuit Board-230V
311307	Front Circuit Board
311308	Alpha-Numeric Display Board
311119	Door Up/Down Limit Switch
311120	Over-Temperature Fuse
311121	Thermocouple Assembly
311122	Door Brick Platform
311124	Calibration Instrument Kit
311126	Muffle-115V
311127	Muffle-230V
311128	Upper Housing View Glass
311129	Door Drive Belt
311614	Vacuum Valve Assembly
311615	Door Drive Motor
311132	Muffle Power Terminal Insulator
311133	Muffle Power Terminal Replacement Kit
311134	Door Seal Gasket
311135	Top Gasket
311136	Viewing Window 'O' Ring
311137	Muffle Viewing Window
311138	Door Leg Spring
311139	Door Leg Pin
311140	Manual Door Crank Handle
311141	Elevator Door
311309	Main Circuit Breaker
311310	Pump Circuit Breaker
311143	Main Power Relay
311144	Thermocouple Nut
311145	Thermocouple Fitting
311146	Thermocouple 'O' Ring
311519	Cooling Tray
311154	Door Center Pin
311155	Door Center Spring

Fahrenheit/Celsius Conversion Chart

Locate the temperature you wish to convert in the Reference Column ("REF.").

- To find the FAHRENHEIT equivalent – read to the RIGHT.
- To find the CELSIUS equivalent – read to the LEFT.

EXAMPLE: You are working at 990°C. Find 990 in the reference column. Read to the right. Fahrenheit equivalent is 1814°. If 990° is Fahrenheit, the equivalent in Centigrade is to the left, 532°.

C	REF.	F	C	REF.	F	C	REF.	F	C	REF.	F	C	REF.	F	C	REF.	F	C	REF.	F	C	REF.	F
-17.8	0	32	24.4	76	168.8	321	610	1130	743	1370	2498	1166	2130	3866	1588	2890	5234	2010	3650	6602	2432	4410	7970
-17.2	1	33.8	25.0	77	170.6	327	620	1148	749	1380	2516	1171	2140	3884	1593	2900	5252	2016	3660	6620	2438	4420	7988
-16.7	2	35.6	25.6	78	172.4	332	630	1166	754	1390	2534	1177	2150	3902	1599	2910	5270	2021	3670	6638	2433	4430	8006
-16.1	3	37.4	26.1	79	174.2	338	640	1184	760	1400	2552	1182	2160	3920	1604	2920	5288	2027	3680	6656	2449	4440	8024
-15.6	4	39.2	26.7	80	176.0	343	650	1202	766	1410	2570	1188	2170	3938	1610	2930	5306	2032	3690	6674	2454	4450	8042
-15.0	5	41.0	27.2	81	177.8	349	660	1220	771	1420	2588	1193	2180	3956	1616	2940	5324	2038	3700	6692	2460	4460	8060
-14.4	6	42.8	27.8	82	179.6	354	670	1238	777	1430	2606	1199	2190	3974	1621	2950	5342	1043	3710	6710	2466	4470	8078
-13.9	7	44.6	28.3	83	181.4	360	680	1256	782	1440	2624	1204	2200	3992	1627	2960	5360	2049	3720	6728	2471	4480	8096
-13.3	8	46.4	28.9	84	183.2	366	690	1274	788	1450	2642	1210	2210	4010	1632	2970	5378	2054	3730	6746	2477	4490	8114
-12.8	9	48.2	29.4	85	185.0	371	700	1292	793	1460	2660	1216	2220	4028	1638	2980	5396	2060	3740	6764	2482	4500	8132
-12.2	10	50.0	30.0	86	186.8	377	710	1310	799	1470	2678	1221	2230	4046	1643	2990	5414	2066	3750	6782	2488	4510	8150
-11.7	11	51.8	30.6	87	188.6	382	720	1328	804	1480	2696	1227	2240	4064	1649	3000	5432	2071	3760	6800	2493	4520	8168
-11.1	12	53.6	31.1	88	190.4	388	730	1346	810	1490	2714	1232	2250	4082	1654	3010	5450	2077	3770	6818	2499	4530	8186
-10.6	13	55.4	31.7	89	192.2	393	740	1364	816	1500	2732	1238	2260	4100	1660	3020	5468	2082	3780	6836	2504	4540	8204
-10.0	14	57.2	32.2	90	194.0	399	750	1382	821	1510	2750	1243	2270	4118	1666	3030	5486	2088	3790	6854	2510	4550	8222
-9.44	15	59.0	32.8	91	195.8	404	760	1400	827	1520	2768	1249	2280	4136	1671	3040	5504	2093	3800	6872	2516	4560	8240
-8.89	16	60.8	33.3	92	197.6	410	770	1418	832	1530	2786	1254	2290	4154	1677	3050	5522	2099	3810	6890	2521	4570	8258
-8.33	17	62.6	33.9	93	199.4	416	780	1436	838	1540	2804	1260	2300	4172	1682	3060	5540	2104	3820	6908	2527	4580	8276
-7.78	18	64.4	34.4	94	201.2	421	790	1454	843	1550	2822	1266	2310	4190	1688	3070	5558	2110	3830	6926	2532	4590	8294
-7.22	19	66.2	35.0	95	203.0	427	800	1472	849	1560	2840	1271	2320	4208	1693	3080	5576	2116	3840	6944	2538	4600	8312
-6.67	20	68.0	35.6	96	204.8	432	810	1490	854	1570	2858	1277	2330	4226	1699	3090	5594	2121	3850	6962	2543	4610	8330
-6.11	21	69.8	36.1	97	206.6	438	820	1508	860	1580	2876	1282	2340	4244	1704	3100	5612	2127	3860	6980	2549	4620	8348
-5.56	22	71.6	36.7	98	208.4	443	830	1526	866	1590	2894	1288	2350	4262	1710	3110	5630	2132	3870	6998	2554	4630	8366
-5.00	23	73.4	37.2	99	210.2	449	840	1544	871	1600	2912	1293	2360	4280	1716	3120	5648	2138	3880	7016	2560	4640	8384
-4.44	24	75.2	37.8	100	212.0	454	850	1562	877	1610	2930	1299	2370	4298	1721	3130	5666	2143	3890	7034	2566	4650	8402
-3.89	25	77.0	43	110	230	460	860	1580	882	1620	2948	1304	2380	4316	1727	3140	5684	2149	3890	7052	2571	4660	8420
-3.33	26	78.8	49	120	248	466	870	1598	888	1630	2966	1310	2390	4334	1732	3150	5702	2154	3910	7070	2577	4670	8438
-2.78	27	80.6	54	130	266	471	880	1616	893	1640	2984	1316	2400	4352	1738	3160	5720	2160	3920	7088	2582	4680	8456
-2.22	28	82.4	60	140	284	477	890	1634	899	1650	3002	1321	2410	4370	1743	3170	5738	2166	3930	7106	2588	4690	8474
-1.67	29	84.2	66	150	302	482	900	1652	904	1660	3020	1327	2420	4388	1749	3180	5756	2171	3940	7124	2593	4700	8492
-1.11	30	86.0	71	160	320	488	910	1670	910	1670	3038	1332	2430	4406	1754	3190	5774	2177	3950	7142	2599	4710	8510
-0.56	31	87.8	77	170	338	493	920	1688	916	1680	3056	1338	2440	4424	1760	3200	5792	2182	3960	7160	2604	4720	8528
0	32	89.6	82	180	356	499	930	1706	921	1690	3074	1343	2450	4442	1766	3210	5810	2188	3970	7178	2610	4730	8546
0.56	33	91.4	88	190	374	504	940	1724	927	1700	3092	1349	2460	4460	1771	3220	5828	2193	3980	7196	2616	4740	8564
1.11	34	93.2	93	200	392	510	950	1742	932	1710	3110	1354	2470	4478	1777	3230	5846	2199	3990	7214	2621	4750	8582
1.67	35	95.0	99	210	410	516	960	1760	938	1720	3128	1360	2480	4496	1782	3240	5864	2204	4000	7232	2627	4760	8600
2.22	36	96.8	100	212	413	521	970	1778	943	1730	3146	1366	2490	4514	1788	3250	5882	2210	4010	7250	2632	4770	8618
2.78	37	98.6	104	220	428	527	980	1796	949	1740	3164	1371	2500	4532	1793	3260	5900	2216	4020	7268	2638	4780	8636
3.33	38	100.4	110	230	446	532	990	1814	954	1750	3182	1377	2510	4550	1799	3270	5918	2221	4030	7286	2643	4790	8654
3.89	39	102.2	116	240	464	538	1000	1832	960	1760	3200	1382	2520	4568	1804	3280	5936	2227	4040	7304	2649	4800	8672
4.44	40	104.0	121	250	482	543	1010	1850	966	1770	3218	1388	2530	4586	1810	3290	5954	2232	4050	7322	2654	4810	8690
5.00	41	105.8	127	260	500	549	1020	1868	971	1780	3236	1393	2540	4604	1816	3300	5972	2238	4060	7340	2660	4820	8708
5.56	42	107.6	132	270	518	554	1030	1886	977	1790	3254	1399	2550	4622	1821	3310	5990	2243	4070	7358	2666	4830	8726
6.11	43	109.4	138	280	536	560	1040	1904	982	1800	3272	1404	2560	4640	1827	3320	6008	2249	4080	7376	2671	4840	8744
6.67	44	111.2	143	290	554	566	1050	1922	988	1810	3290	1410	2570	4658	1832	3330	6026	2254	4090	7394	2677	4850	8762
7.22	45	113.0	149	300	572	571	1060	1940	993	1820	3308	1416	2580	4676	1838	3340	6044	2260	4100	7412	2682	4860	8780
7.78	46	114.8	154	310	590	577	1070	1958	999	1830	3326	1421	2590	4694	1843	3350	6062	2266	4110	7430	2688	4870	8798
8.33	47	116.6	160	320	608	582	1080	1976	1004	1840	3344	1427	2600	4712	1849	3360	6080	2271	4120	7448	2693	4880	8816
8.89	48	118.4	166	330	626	588	1090	1994	1010	1850	3362	1432	2610	4730	1854	3370	6098	2277	4130	7466	2699	4890	8834
9.44	49	120.2	171	340	644	593	1100	2012	1016	1860	3380	1438	2620	4748	1860	3380	6116	2282	4140	7484	2704	4900	8852
10.0	50	122.0	177	350	662	599	1110	2030	1021	1870	3398	1443	2630	4766	1866	3390	6134	2288	4150	7502	2710	4910	8870
10.6	51	123.8	182	360	680	604	1120	2048	1027	1880	3416	1449	2640	4784	1871	3400	6152	2293	4160	7520	2716	4920	8888
11.1	52	125.6	188	370	698	610	1130	2066	1032	1890	3434	1454	2650	4802	1877	3410	6170	2299	4170	7538	2721	4930	8906
11.7	53	127.4	193	380	716	616	1140	2084	1038	1900	3452	1460	2660	4820	1882	3420	6188	2304	4180	7556	2727	4940	8924
12.2	54	129.2	199	390	734	621	1150	2102	1043	1910	3470	1466	2670	4838	1888	3430	6206	2310	4190	7574	2732	4950	8942
12.8	55	131.0	204	400	752	627	1160	2120	1049	1920	3488	1471	2680	4856	1893	3440	6224	2316	4200	7592	2738	4960	8960
13.3	56	132.8	210	410	770	632	1170	2138	1054	1930	3506	1477	2690	4874	1899	3450	6242	2321	4210	7610	2743	4970	8978
13.9	57	134.6	216	420	788	638	1180	2156	1060	1940	3524	1482	2700	4892	1904	3460	6260	2327	4220	7628	2749	4980	8996
14.4	58	136.4	221	430	806	643	1190	2174	1066	1950	3542	1488	2710	4910	1910	3470	6278	2332	4230	7646	2754	4990	9014
15.0	59	138.2	227	440	824	649	1200	2192	1071	1960	3560	1493	2720	4928	1916	3480	6296	2338	4240	7664	2760	5000	9032
15.6	60	140.0	232	450	842	654	1210	2210	1077	1970	3578	1499	2730	4946	1921	3490	6314	2343	4250	7682			
16.1	61	141.8	238	460	860	660	1220	2228	1082	1980	3596	1504	2740	4964	1927	3500	6332	2349	4260	7700			
16.7	62	143.6	243	470	878	666	1230	2246	1088	1990	3614	1510	2750	4982	1932	3510	6350	2354	4270	7718			
17.2	63	145.4	249	480	896	671	1240	2264	1093	2000	3632	1516	2760	5000	1938	3320	6368	2360	4280	7736			
17.8	64	147.2	254	490	914	677	1250	2282	1099	2010	3650	1521	2770	5018	1943	3530	6386	2366	4290	7754			
18.3	65	149.0	260	500	932	682	1260	2300	1104	2020	3668	1527	2780	5036	1949	3540	6404	2371	4300	7772			
18.9	66	150.8	266	510	950	688	1270	2318	1110	2030	3686	1532	2790	5054	1954	3550	6422	2377	4310	7790			
19.4	67	152.6	271	520	968	693	1280	2336	1116	2040	3704	1538	2800	5072	1960	3560	6440	2382	4320	7808			
20.0	68	154.4	277	530	986	699	1290	2354	1121	2050	3722	1543	2810	5090	1966	3570	6458	2388	4330	7826			
20.6	69	156.2	282	540	1004	704	1300	2372	1127	2060	3740	1549	2820	5108	1971	3580	6476	2393	4340	7844			
21.1	70	158.0	288	550	1022	710	1310	2390	1132	2070	3758	1554	2830	5126	1977	3590	6494	2399	4350	7862			
21.7	71	159.8	293	560	1040	716	1320	2408	1138	2080	3776	1560	2840	5144	1982	3600	6512	2404	4360	7880			
22.2	72	161.6	299	570	1058	721	1330	2426	1143	2090	3794	1566	2850	5162	1988	3610	6530	2410	4370	7898			
22.8	73	163.4	304	580	1076	727	1340	2444	1149	2100	3812	1571	2860	5180	1993	3620	6548	2416	4380	7916			
23.3	74	165.2	310	590	1094	732	1350	2462	1154	2110	3830	1577	2870	5198	1999	3630	6566	2421	4390	7934			
23.9	75	167.0	316	600	1112	738	1360	2480	1160	2120	3848	1582	2880	5216	2004	3640	6584	2427	4400	7952			